CROWN PAVILIONS

Luxury Wooden Gazebos & Garden Shelters

For year-round alfresco dining, lounging & entertaining

The marque of excellence



Welcome

Imagine a space where you can escape from the pressures of life, a beautiful outdoor space where you can unwind and enjoy a drink at the end of a busy day, a gloriously indulgent space that you can truly make your own.

Imagine a space, in the very heart of your garden, where you can entertain friends, serve sumptuous suppers and party long into the night. Or a blissful space to relax over breakfast, laze away a summer’s afternoon or simply sit back with a good book.

Why Crown?

When it’s something as special as your own personal haven, you want to be certain that your gazebo won’t simply look stunning in spring, summer and autumn, but that it will also cope with our British winters, enabling year-round use.

Crown Pavilions is the market leader because we over-deliver on quality and service at every stage of design and build. The Crown Marque of Excellence ensures your gazebo remains the focal point of your garden, year after year.

Industry-leading value

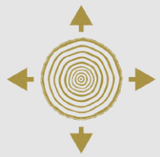

Thicker Posts & Handrails

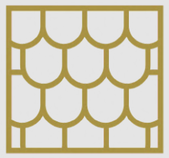

Cedar Tiled Roofs as Standard



Fuller Cushions & Heavier Side Panels



Water-Resistant Zips on all Side Panels



Weatherproof Marine Grade Fabrics



Installation Included



“the best that money can buy...”

After looking at numerous Garden Room and luxury wooden gazebo manufacturers on the market we decided to go with Crown Pavilions as their buildings are undoubtedly the best that money can buy and the service level was exceptional.

They exceeded our expectations at every stage. If you are looking for the best garden buildings on the market, then Crown Pavilions is the company to hire!

Lord Alan Sugar

CROWN PAVILIONS CUSTOMER

INSIDE THIS BROCHURE

Contents

Luxury Wooden Gazebos 06
Including weatherproof marine grade side panels

Included & Optional Accessories 21
Plans at a glance, included & optional accessories

Weatherproof Glazed Panels 23
St. Tropez, Eden & Orangery

Double Glazed & Insulated Panels 27
Eden & Orangery, for year-round living

Internal Furniture 29
Dining & lounging packages

Smokeless BBQ Collection 30
Marine grade side & glazed panels

Luxury Wooden Shelters 32
EPDM flat roof & cedar tiled roof packages

Bespoke & Foundations 43
Bespoke buildings, EcoGrid, decked foundations & ground screws

Our Showrooms 54
Six garden centre locations across England



01 · PREMIUM COLLECTION

Luxury Wooden Gazebos

Including Weatherproof Marine Grade Side Panels

Fourteen designs, from the intimate Rose to the grand Versailles. Every model is supplied as a complete Premium Collection package, with a cedar tiled or thatched roof, redwood underside cladding and weatherproof marine grade side panels as standard.

Dine, work, entertain, relax & celebrate in absolute comfort and style all year round.

INTIMATE LUXURY · SEATS 2–6

Rose · Chelsea · Tudor · Elizabeth

FRIENDS & FAMILY LUXURY · SEATS 4–10

Guinevere · Edward · Wolsey · Wentworth · Ascot

SPACIOUS LUXURY · SEATS 6–12

Eden · Windsor · Orangery · Hampton

GRAND LUXURY · SEATS 10–16

Versailles

Full plans and specifications for every model follow on pages 7–20.



Crown Rose

SEATS 2 – 4

FLEXIBLE FINANCE OPTIONS AVAILABLE

from £132/month*



RRP FROM £13,300

ROOF (MM)	BASE (MM)	OVERALL HEIGHT
2590 (8’6”)	2200 (7’2”)	2724 (8’11”)

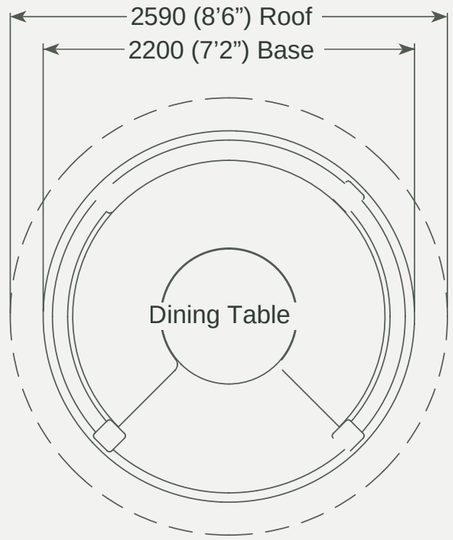

2724 (8’ 11”) Overall roof height

Premium Collection package

INCLUDING WEATHERPROOF MARINE GRADE SIDE PANELS

- Redwood timber framed building
- Cedar tiled or thatched roof
- Underside cladding
- 1 × Entrance
- 3 × Balustrade infills
- 4 × Weatherproof marine grade side panels
- 3 × Dining benches
- Full set of cushions
- Fixed table (with glass top)

Most popular infill selections shown. Any other configuration available on request.

Visit crownpavilions.com

Delivery and installation included within 100 miles.

Base quoted separately after a site survey. *All prices inc. VAT · 8.9% APR representative · Credit subject to status. Please refer to the price list for representative example.

Crown Chelsea

SEATS 4 – 6

FLEXIBLE FINANCE OPTIONS AVAILABLE

from £147/month*



RRP FROM £14,800

ROOF (MM)

2900 (9’6”)

BASE (MM)

2400 (7’11”)

OVERALL HEIGHT

2696 (8’10”)

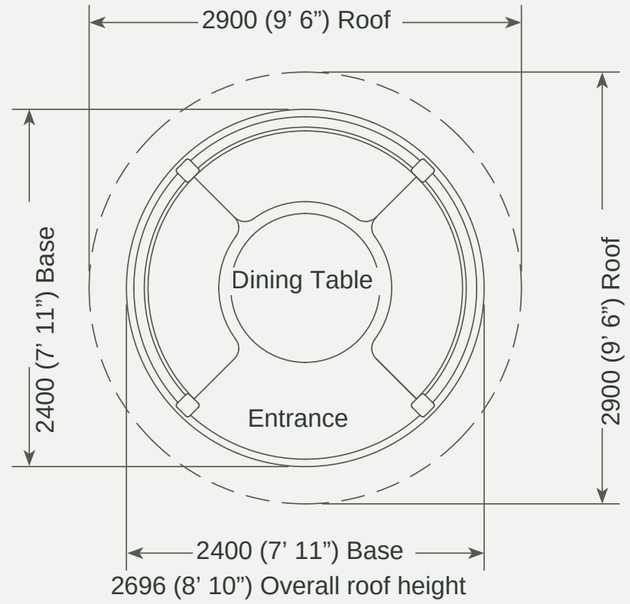

Premium Collection package

INCLUDING WEATHERPROOF MARINE GRADE SIDE PANELS

- Redwood timber framed building
- Cedar tiled or thatched roof
- Underside cladding
- 1 × Entrance
- 3 × Balustrade infills
- 4 × Weatherproof marine grade side panels
- 3 × Dining benches
- Full set of cushions
- 1 × Table (with glass top)

Most popular infill selections shown. Any other configuration available on request.

Visit crownpavilions.com

Delivery and installation included within 100 miles.

Base quoted separately after a site survey. *All prices inc. VAT · 8.9% APR representative · Credit subject to status. Please refer to the price list for representative example.

Crown Tudor

SEATS 6 – 8

FLEXIBLE FINANCE OPTIONS AVAILABLE

from £170/month*



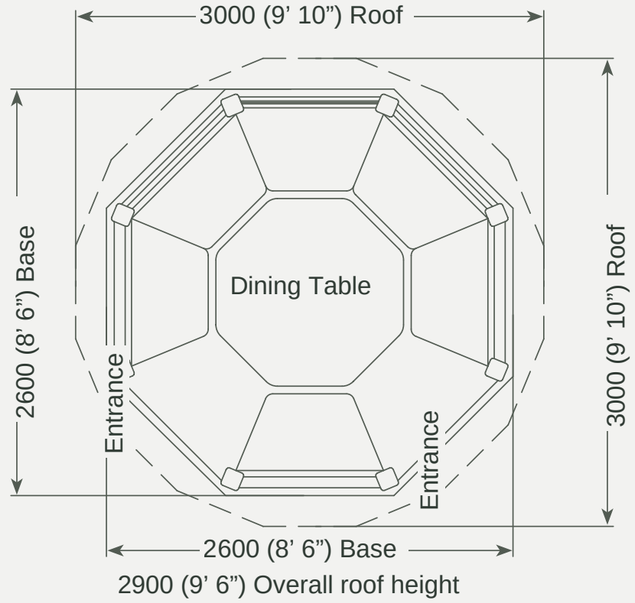

Premium Collection package

INCLUDING WEATHERPROOF MARINE GRADE SIDE PANELS

- Redwood timber framed building
- Cedar tiled or thatched roof
- Underside cladding
- 2 × Entrance
- 3 × Balustrade infills
- 8 × Weatherproof marine grade side panels
- 6 × Dining benches
- Full set of cushions
- 1 × Table (with glass top)

Most popular infill selections shown. Any other configuration available on request.

ROOF (MM)	BASE (MM)	OVERALL HEIGHT
3000 (9’10”)	2600 (8’6”)	2900 (9’6”)

Visit crownpavilions.com

Delivery and installation included within 100 miles.

Base quoted separately after a site survey. *All prices inc. VAT · 8.9% APR representative · Credit subject to status. Please refer to the price list for representative example.

Crown Elizabeth

SEATS 6 – 8

FLEXIBLE FINANCE OPTIONS AVAILABLE

from £190/month*



RRP FROM £19,100

ROOF (MM)	BASE (MM)	OVERALL HEIGHT
3300 (10’10”)	2820 (9’3”)	2920 (9’7”)

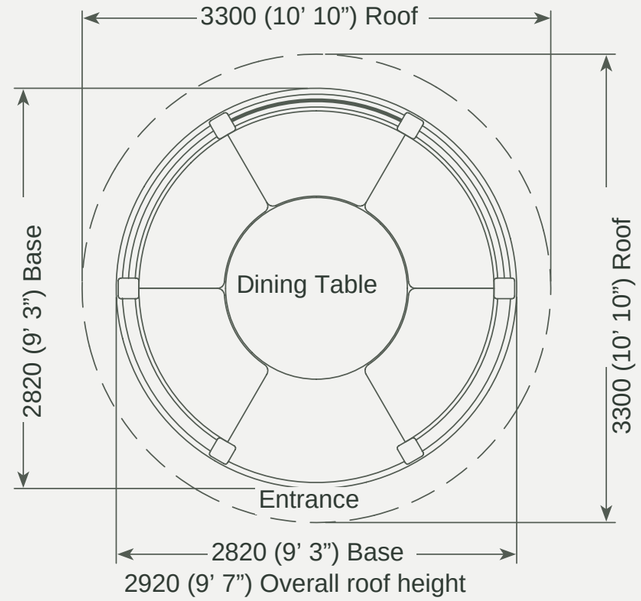

Premium Collection package

INCLUDING WEATHERPROOF MARINE GRADE SIDE PANELS

- Redwood timber framed building
- Cedar tiled or thatched roof
- Underside cladding
- 1 × Entrance
- 5 × Balustrade infills
- 6 × Weatherproof marine grade side panels
- 5 × Dining benches
- Full set of cushions
- 1 × Table (with glass top)

Most popular infill selections shown. Any other configuration available on request.

Visit crownpavilions.com

Delivery and installation included within 100 miles.

Base quoted separately after a site survey. *All prices inc. VAT · 8.9% APR representative · Credit subject to status. Please refer to the price list for representative example.

Crown Guinevere

SEATS 7 – 10

FLEXIBLE FINANCE OPTIONS AVAILABLE

from £196/month*



RRP FROM £19,700

ROOF (MM)

3500 (11’6”)

BASE (MM)

3100 (10’2”)

OVERALL HEIGHT

3000 (9’10”)

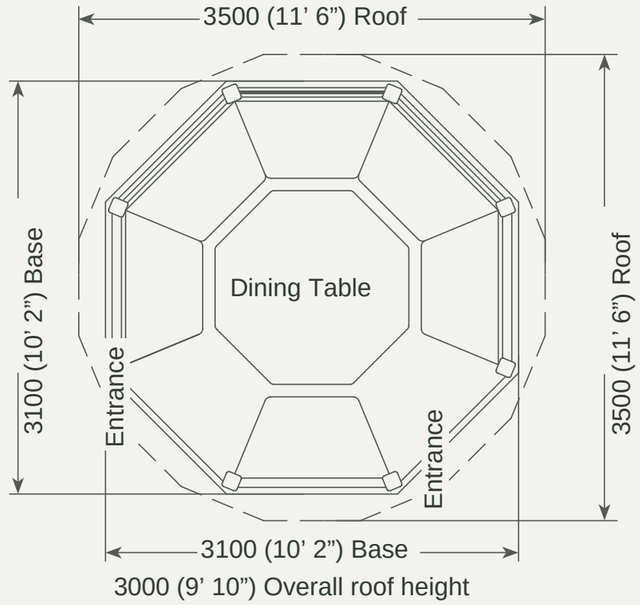

3000 (9’ 10”) Overall roof height

Premium Collection package

INCLUDING WEATHERPROOF MARINE GRADE SIDE PANELS

- Redwood timber framed building
- Cedar tiled or thatched roof
- Underside cladding
- 2 × Entrance
- 6 × Balustrade infills
- 8 × Weatherproof marine grade side panels
- 6 × Dining benches
- Full set of cushions
- 1 × Table (with glass top)

Most popular infill selections shown. Any other configuration available on request.

Visit crownpavilions.com

Delivery and installation included within 100 miles.

Base quoted separately after a site survey. *All prices inc. VAT · 8.9% APR representative · Credit subject to status. Please refer to the price list for representative example.

Crown Edward

SEATS 8 – 10

FLEXIBLE FINANCE OPTIONS AVAILABLE

from £227/month*



RRP FROM £22,800

ROOF (MM)

3700 (12’6”)

BASE (MM)

3350 (11’)

OVERALL HEIGHT

3200 (10’6”)

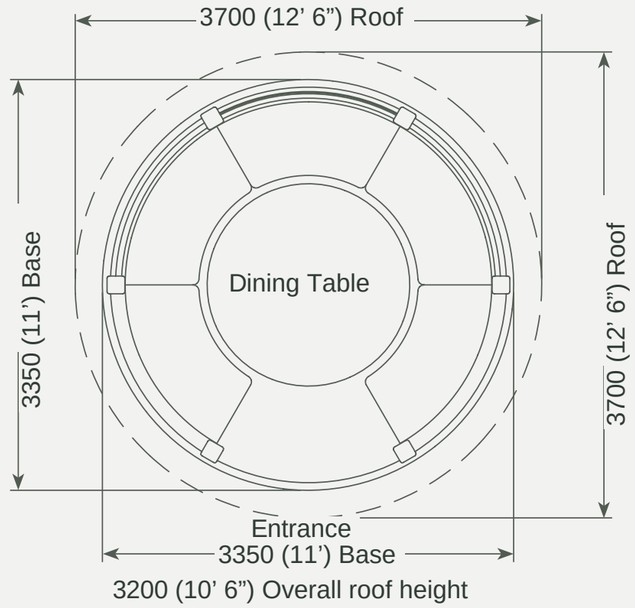

Premium Collection package

INCLUDING WEATHERPROOF MARINE GRADE SIDE PANELS

- Redwood timber framed building
- Cedar tiled or thatched roof
- Underside cladding
- 1 × Entrance
- 5 × Balustrade infills
- 6 × Weatherproof marine grade side panels
- 5 × Dining benches
- Full set of cushions
- 1 × Table (with glass top)

Most popular infill selections shown. Any other configuration available on request.

Visit crownpavilions.com

Delivery and installation included within 100 miles.

Base quoted separately after a site survey. *All prices inc. VAT · 8.9% APR representative · Credit subject to status. Please refer to the price list for representative example.

Crown Wolsey

SEATS 8 – 10

AVAILABLE GROUND-LEVEL OR RAISED

FLEXIBLE FINANCE OPTIONS AVAILABLE

from £216/month*



RRP FROM £21,700

ROOF (MM)

3400 (11’2”)

BASE (MM)

3000 (9’10”)

OVERALL HEIGHT

3200 (10’6”)

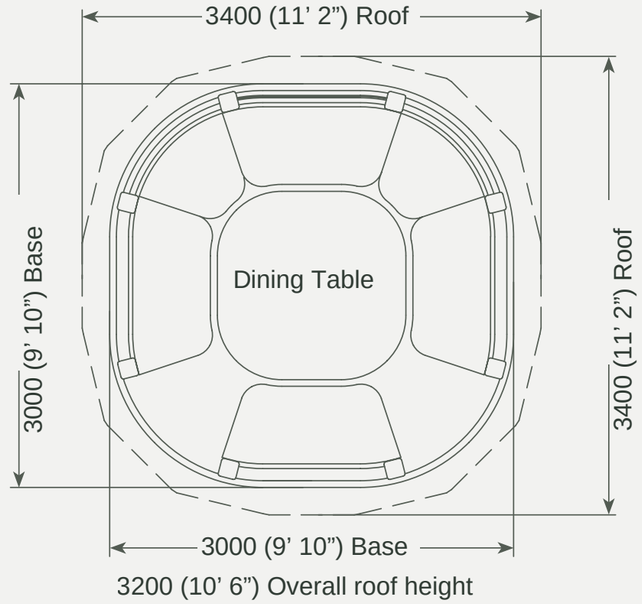

3200 (10’ 6”) Overall roof height

Premium Collection package

INCLUDING WEATHERPROOF MARINE GRADE SIDE PANELS

- Redwood timber framed building
- Cedar tiled or thatched roof
- Underside cladding
- 2 × Entrance
- 6 × Balustrade infills
- 8 × Weatherproof marine grade side panels
- 6 × Dining benches
- Full set of cushions
- 1 × Table (with glass top)

Most popular infill selections shown. Any other configuration available on request.

Visit crownpavilions.com

Delivery and installation included within 100 miles.

Base quoted separately after a site survey. *All prices inc. VAT · 8.9% APR representative · Credit subject to status. Please refer to the price list for representative example.

Crown Wentworth

SEATS 8 – 10

AVAILABLE GROUND-LEVEL OR RAISED

FLEXIBLE FINANCE OPTIONS AVAILABLE

from £251/month*



RRP FROM £25,300

ROOF (MM)

4100 (13’5”)

BASE (MM)

3600 (11’10”)

OVERALL HEIGHT

3200 (10’6”)

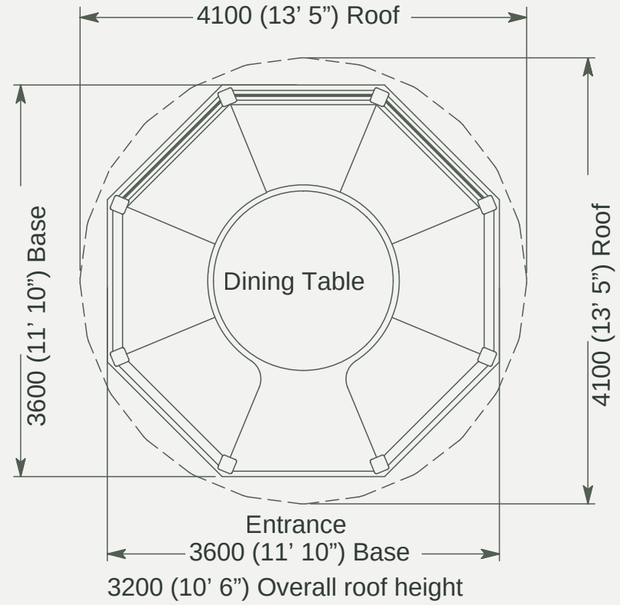

Premium Collection package

INCLUDING WEATHERPROOF MARINE GRADE SIDE PANELS

- Redwood timber framed building
- Cedar tiled or thatched roof
- Underside cladding
- 1 × Entrance
- 7 × Balustrade infills
- 8 × Weatherproof marine grade side panels
- 5 × Dining benches
- Full set of cushions
- 1 × Table (with glass top)
- Raised steps & balustrades (raised version)

Most popular infill selections shown. Any other configuration available on request.

Visit crownpavilions.com

Delivery and installation included within 100 miles.

Base quoted separately after a site survey. *All prices inc. VAT · 8.9% APR representative · Credit subject to status. Please refer to the price list for representative example.

Crown Ascot

SEATS 8-10

FLEXIBLE FINANCE OPTIONS AVAILABLE

from £257/month*



RRP FROM £25,900

ROOF (MM)

4650 × 3200 (15’3” × 10’6”)

BASE (MM)

4270 × 2820 (14’ × 9’3”)

OVERALL HEIGHT

2920 (9’7”)

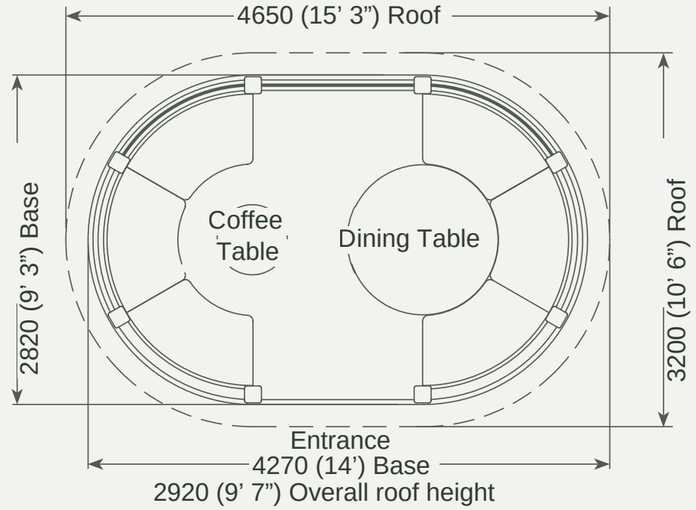

Premium Collection package

INCLUDING WEATHERPROOF MARINE GRADE SIDE PANELS

- Redwood timber framed building
- Cedar tiled or thatched roof
- Underside cladding
- 1 × Entrance
- 4 × Balustrade infills
- 1 × Full clad panel infill
- 2 × ½ clad & ½ plexiglass infills
- 5 × Weatherproof marine grade side panels
- 3 × Dining benches
- 3 × Sofa benches (with cladding)
- Full set of cushions
- 1 × Dining table (glass top)
- 1 × Coffee table (glass top, clad base)
- 2 × Stools

Most popular infill selections shown. Any other configuration available on request.

Visit crownpavilions.com

Delivery and installation included within 100 miles.

Base quoted separately after a site survey. *All prices inc. VAT · 8.9% APR representative · Credit subject to status. Please refer to the price list for representative example.

Crown Eden

SEATS 10-12

FLEXIBLE FINANCE OPTIONS AVAILABLE

from £305/month*



RRP FROM £30,700

ROOF (MM)	BASE (MM)	OVERALL HEIGHT
5045 × 3545 (16’6” × 11’7”)	4545 × 3045 (14’11” × 9’11”)	3020 (9’11”)

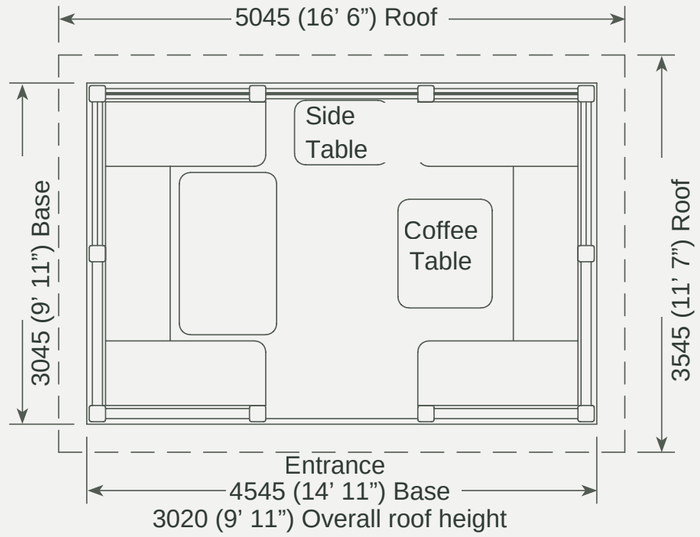

Premium Collection package

INCLUDING WEATHERPROOF MARINE GRADE SIDE PANELS

- Redwood timber framed building
- Cedar tiled or thatched roof
- Underside cladding
- 1 × Entrance
- 4 × Balustrade infills
- 3 × Full clad panel infills
- 2 × ½ clad & ½ plexiglass infills
- 5 × Weatherproof marine grade side panels
- 3 × Dining benches
- 3 × Sofa benches (with cladding)
- 2 × Stools
- Full set of cushions
- 1 × Dining table (glass top)
- 1 × Coffee table (glass top, clad base)
- 1 × Side table with cushion

Most popular infill selections shown. Any other configuration available on request.

Visit crownpavilions.com

Delivery and installation included within 100 miles.

Base quoted separately after a site survey. *All prices inc. VAT · 8.9% APR representative · Credit subject to status. Please refer to the price list for representative example.

Crown Windsor

SEATS 10-12

FLEXIBLE FINANCE OPTIONS AVAILABLE

from £320/month*



RRP FROM £32,200

ROOF (MM)	BASE (MM)	OVERALL HEIGHT
5380 × 3700 (17’8” × 12’2”)	5000 × 3350 (16’5” × 11’)	3200 (10’6”)

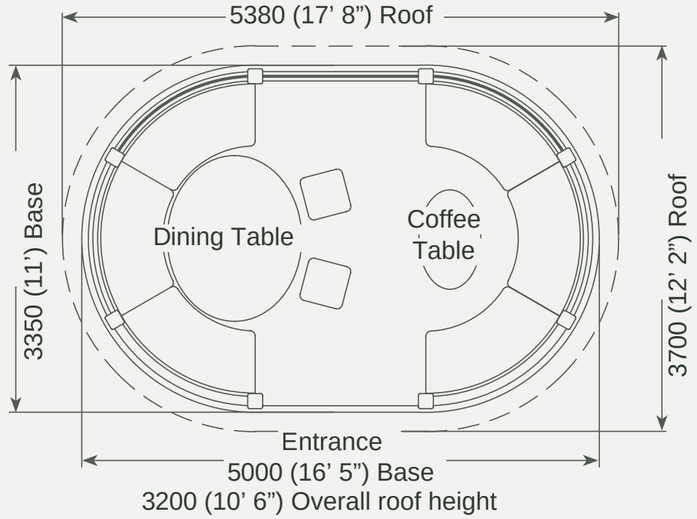

Premium Collection package

INCLUDING WEATHERPROOF MARINE GRADE SIDE PANELS

- Redwood timber framed building
- Cedar tiled or thatched roof
- Underside cladding
- 1 × Entrance
- 2 × Balustrade infills
- 3 × Full clad panel infills
- 2 × ½ clad & ½ plexiglass infills
- 3 × Weatherproof marine grade side panels
- 3 × Dining benches
- 3 × Sofa benches (with cladding)
- 2 × Stools
- Full set of cushions
- 1 × Dining table (glass top)
- 1 × Coffee table (glass top, clad base)

Most popular infill selections shown. Any other configuration available on request.

Visit crownpavilions.com

Delivery and installation included within 100 miles.

Base quoted separately after a site survey. *All prices inc. VAT · 8.9% APR representative · Credit subject to status. Please refer to the price list for representative example.

Crown Orangery

SEATS 12-14

FLEXIBLE FINANCE OPTIONS AVAILABLE

from £401/month*



RRP FROM £40,300

ROOF (MM)	BASE (MM)	OVERALL HEIGHT
5550 × 4440 (18’2” × 14’7”)	5100 × 4000 (16’9” × 13’1”)	3300 (10’10”)

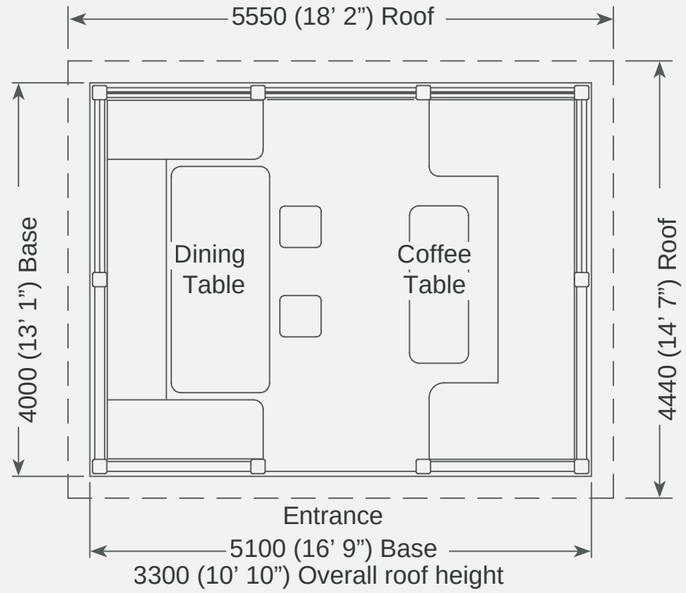

Premium Collection package

INCLUDING WEATHERPROOF MARINE GRADE SIDE PANELS

- Redwood timber framed building
- Cedar tiled or thatched roof
- Underside cladding
- 1 × Entrance
- 4 × Balustrade infills
- 3 × Full clad panel infills
- 2 × ½ clad & ½ plexiglass infills
- 5 × Weatherproof marine grade side panels
- 3 × Dining benches
- 3 × Sofa benches (with cladding)
- 2 × Stools
- Full set of cushions
- 1 × Timber dining table (glass top)
- 1 × Timber coffee table (glass top, clad base)

Most popular infill selections shown. Any other configuration available on request.

Visit crownpavilions.com

Delivery and installation included within 100 miles.

Base quoted separately after a site survey. *All prices inc. VAT · 8.9% APR representative · Credit subject to status. Please refer to the price list for representative example.

Crown Hampton

SEATS 10 – 14

FLEXIBLE FINANCE OPTIONS AVAILABLE

from £412/month*



RRP FROM £41,400

ROOF (MM)	BASE (MM)	OVERALL HEIGHT
6300 × 4650 (20’8” × 15’3”)	5860 × 4210 (19’3” × 13’10”)	3300 (10’10”)

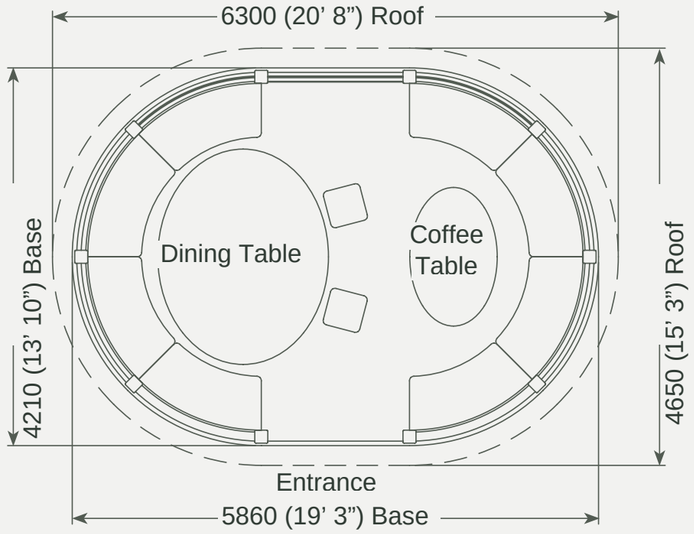

Premium Collection package

INCLUDING WEATHERPROOF MARINE GRADE SIDE PANELS

- Redwood timber framed building
- Cedar tiled or thatched roof
- Underside cladding
- 1 × Entrance
- 4 × Balustrade infills
- 3 × Full clad panel infills
- 2 × ½ clad & ½ plexiglass infills
- 5 × Weatherproof marine grade side panels
- 4 × Dining benches
- 4 × Sofa benches (with cladding)
- 2 × Stools
- Full set of cushions
- 1 × Dining table (glass top)
- 1 × Coffee table (glass top, clad base)

Most popular infill selections shown. Any other configuration available on request.

Visit crownpavilions.com

Delivery and installation included within 100 miles.

Base quoted separately after a site survey. *All prices inc. VAT · 8.9% APR representative · Credit subject to status. Please refer to the price list for representative example.

Crown Versailles

SEATS 12 – 16

FLEXIBLE FINANCE OPTIONS AVAILABLE

from £621/month*



RRP FROM £83,900

ROOF (MM)

8670 × 5850 (28’5” × 19’2”)

BASE (MM)

8100 × 5280 (26’7” × 17’4”)

OVERALL HEIGHT

3650 (12’)

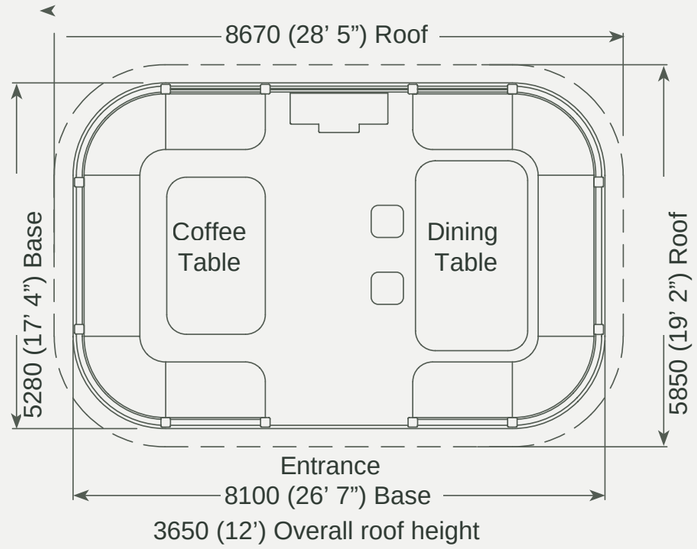

Premium Collection package

INCLUDING WEATHERPROOF MARINE GRADE SIDE PANELS

- Redwood timber framed building
- Cedar tiled or thatched roof
- Underside cladding
- 1 × Entrance
- 8 × Balustrade infills
- 3 × Full clad panel infills
- 9 × Weatherproof marine grade side panels
- 5 × Dining benches or polywicker chairs
- 5 × Sofa benches (with cladding)
- 2 × Stools
- Full set of cushions
- 1 × Timber dining table (glass top)
- 1 × Timber coffee table (glass top, clad base)

Most popular infill selections shown. Any other configuration available on request.

Visit crownpavilions.com

Delivery and installation included within 100 miles.

Base quoted separately after a site survey. *All prices inc. VAT · 8.9% APR representative · Credit subject to status. Please refer to the price list for representative example.

Included Accessories

Every Premium Collection gazebo

FLEXIBLE FINANCE OPTIONS AVAILABLE

Thatch option (no extra charge)



Half clad & half perspex infill panel



Full clad infill panel



Balustrade and marine canvas blind infill



Timber stool with matching cushion



6mm toughened glass table top to fit your dining table (Premium range only)



Marine grade acrylic canvas blinds with zips as standard

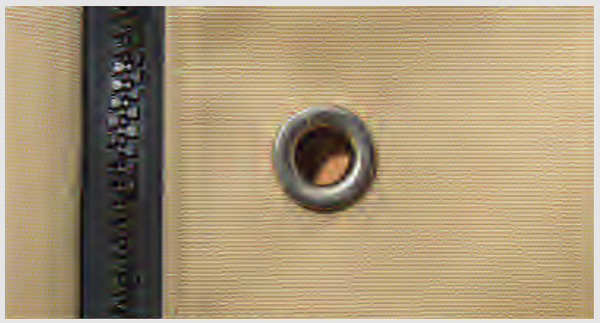

Elasticated toggle



Colours

Cushions, piping and blinds are available in any combination of the colours below so you can mix and match to create your own interior look.

Green



Burgundy



Beige

Ivory

Navy



Taupe

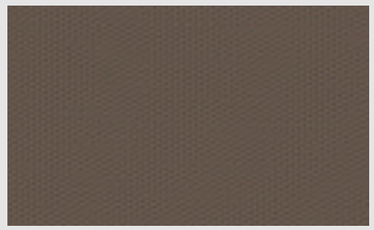

Optional Accessories

Heating, seating & storage

FLEXIBLE FINANCE OPTIONS AVAILABLE



Electric 3(kW) infrared heater with spotlight



Electric 3/6(kW) infrared heater with spotlight



Timber side cabinet, wine shelves & space for wine cooler
L-Shape



Timber side cabinet, wine shelves & space for wine cooler
T-Shape

The Smokeless BBQ Collection

Discover our Smokeless BBQ Collection - designed for refined, smoke-free cooking, seamlessly integrated within your pavilion.



Single Grill

Dimensions:
Oval (1300 x 1600 mm)
Rectangular (1448 x 868 mm)

A more compact option, suited to everyday use.



Double Grill

Dimensions:
Rectangular (2300 x 1000 mm)
Oval (1600 x 2000 mm)

A larger format, ideal for hosting and entertaining.

Smokeless BBQ unit is available to purchase standalone. Contact our team today for full specifications.

Accessories are available at time of order only. All buildings exclude heaters and cabinets unless stated. For current prices, please see our Price List.

02 · PREMIUM COLLECTION

Luxury Wooden Gazebos

Including Weatherproof Glazed Panels, or Double Glazed & Insulated Panels

A fully enclosed gazebo with toughened-glass windows and sliding doors, and optional furniture to use as you wish. For year-round living, choose the glazed & insulated specification with residential-grade double glazing and composite SPC flooring as standard.

FLEXIBILITY

Office, den, studio, summer house or dining & entertaining space

CONVENIENCE

No complicated groundworks and fast installation (1–2 days)

STYLE

Crown signature cedar tiled roof over a vaulted, timber-framed ceiling

AVAILABLE IN

St. Tropez · Eden · Orangery · Windsor · Hampton



Crown St. Tropez

INCLUDING WEATHERPROOF
GLAZED PANELS · 4.5M × 3.0M

FLEXIBLE FINANCE OPTIONS AVAILABLE

from £287/month*



RRP FROM £28,900

SIZE
4.5m × 3.0m

ROOF
EPDM with cladded underside

SKYLIGHT
2m × 2m pyramid

A unique building: hot tub shelter, dining and lounging space or outdoor bar.

The glass pyramid skylight is a sought-after feature – especially for hot tub users – and the bar creates a fun social space that family and friends will love.

Package includes

WEATHERPROOF GLAZED PANELS

- Redwood timber framed building (4.5m × 3m)
- EPDM roof with cladded underside
- 2m × 2m pyramid skylight (dark grey frame)
- 2 × Sliding aluminium doors (dark grey)
- Bar top and 4 × bar stools with cushions
- Available with or without furniture
- Internal decked flooring as standard
- Optional composite SPC flooring upgrade

Visit crownpavilions.com

Delivery and installation included within 100 miles.

Base quoted separately after a site survey. *All prices inc. VAT · 8.9% APR representative · Credit subject to status. Please refer to the price list for representative example.

Crown Eden

INCLUDING WEATHERPROOF
GLAZED PANELS · 4.5M × 3.0M

FLEXIBLE FINANCE OPTIONS AVAILABLE

from £306/month*



RRP FROM £30,750

SIZE
4.5m × 3.0m

ROOF
Cedar tiled pitched

FLOORING
Decked · SPC upgrade

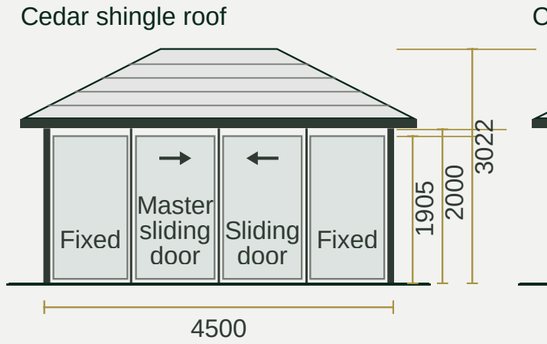

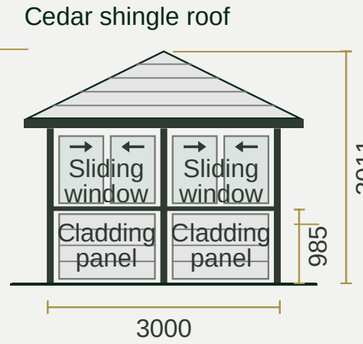

Package includes

WEATHERPROOF GLAZED PANELS

- Premium redwood timber structure
- Cedar tiled pitched roof
- Redwood cladding on underside of roof
- 1 × Sliding set of doors (entrance), grey aluminium frame, 6mm toughened glass
- 2 × Fixed windows, grey aluminium frame, 6mm toughened glass
- 4 × Half clad / half sliding windows, 6mm toughened glass
- 3 × Full timber clad back wall
- Internal decked flooring as standard
- Optional composite SPC flooring upgrade
- Optional dining & lounging furniture packages

Visit crownpavilions.com

Delivery and installation included within 100 miles.

Base quoted separately after a site survey. *All prices inc. VAT · 8.9% APR representative · Credit subject to status. Please refer to the price list for representative example.

Crown Orangery

INCLUDING WEATHERPROOF GLAZED PANELS · 5.0M × 4.0M

FLEXIBLE FINANCE OPTIONS AVAILABLE

from £384/month*



RRP FROM £38,600

SIZE	ROOF	FLOORING
5.0m × 4.0m	Cedar tiled pitched	Decked · SPC upgrade

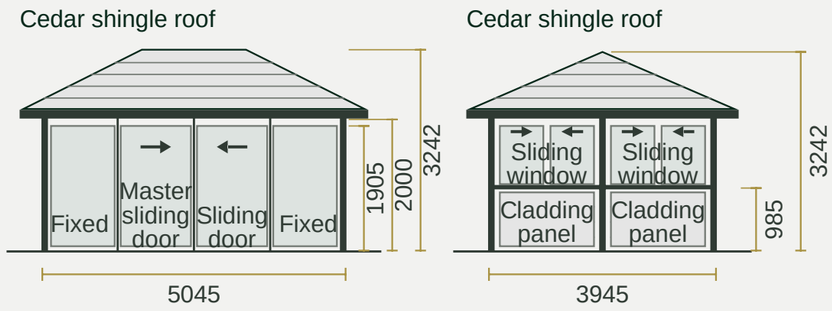

Package includes

WEATHERPROOF GLAZED PANELS

- Premium redwood timber structure
- Cedar tiled pitched roof
- Redwood cladding on underside of roof
- 1 × Sliding set of doors (entrance), grey aluminium frame, 6mm toughened glass
- 2 × Fixed windows, grey aluminium frame, 6mm toughened glass
- 4 × Half clad / half sliding windows, 6mm toughened glass
- 3 × Full timber clad back wall
- Internal decked flooring as standard
- Optional composite SPC flooring upgrade
- Optional dining & lounging furniture packages

Visit crownpavilions.com

Delivery and installation included within 100 miles.

Base quoted separately after a site survey. *All prices inc. VAT · 8.9% APR representative · Credit subject to status. Please refer to the price list for representative example.

Crown Eden

DOUBLE GLAZED & INSULATED
PANELS 4.5M × 3.0M

FLEXIBLE FINANCE OPTIONS AVAILABLE

from £422/month*



RRP FROM £42,500

SIZE	INSULATION	FLOORING
4.5m × 3.0m	30mm PIR, roof, walls & floor	Composite SPC as standard

Cedar shingle roof

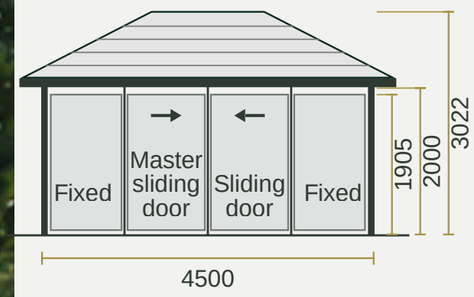

Cedar shingle roof

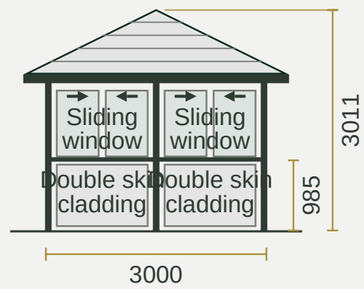

Package includes

WEATHERPROOF DOUBLE GLAZED & INSULATED PANELS

- Premium redwood timber structure
- Premium cedar tiled roof with vaulted ceiling internally
- External and internal double-skin redwood cladding
- Fully insulated with 30mm PIR foil-backed insulation in roof, walls and floor
- Residential-grade composite SPC flooring as standard
- 1 × Sliding set of doors (entrance)
- 2 × Fixed windows
- 4 × Half clad / half sliding windows
- All doors and windows in residential aluminium double glazing
- Optional dining & lounging furniture packages
- Optional custom made BBQ shelter

Visit crownpavilions.com

Delivery and installation included within 100 miles.

Base quoted separately after a site survey. *All prices inc. VAT · 8.9% APR representative · Credit subject to status. Please refer to the price list for representative example.

Crown Orangery

DOUBLE GLAZED & INSULATED PANELS · 5.0M × 4.0M

FLEXIBLE FINANCE OPTIONS AVAILABLE

from £512/month*



RRP FROM £51,500

SIZE	INSULATION	FLOORING
5.0m × 4.0m	30mm PIR, roof, walls & floor	Composite SPC as standard

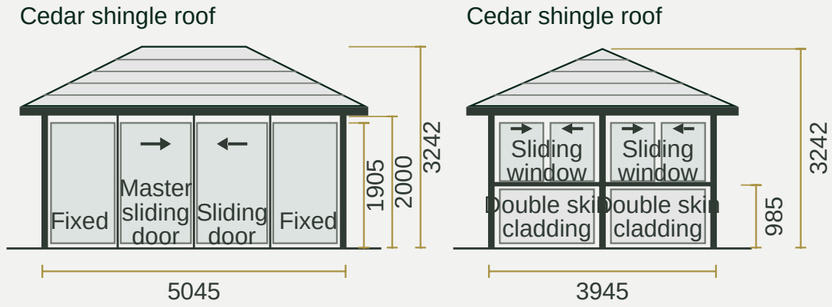

Package includes

WEATHERPROOF DOUBLE GLAZED & INSULATED PANELS

- Premium redwood timber structure
- Premium cedar tiled roof with vaulted ceiling internally
- External and internal double-skin redwood cladding
- Fully insulated with 30mm PIR foil-backed insulation in roof, walls and floor
- Residential-grade composite SPC flooring as standard
- 1 × Sliding set of doors (entrance)
- 2 × Fixed windows
- 4 × Half clad / half sliding windows
- All doors and windows in residential aluminium double glazing
- Optional dining & lounging furniture packages
- Optional custom made BBQ shelter

Visit crownpavilions.com

Delivery and installation included within 100 miles.

Base quoted separately after a site survey. *All prices inc. VAT · 8.9% APR representative · Credit subject to status. Please refer to the price list for representative example.

Internal Furniture

Optional, for glazed and double glazed & insulated gazebos

FLEXIBLE FINANCE OPTIONS AVAILABLE





Dining Package

Timber dining table
3 × Dining benches
Full set of bench cushions
3 × Stools with cushions

Lounging Package

Timber coffee table with cladding
3 × Sofa benches
Full set of sofa back cushions

Dining & Lounging Package

Both packages above, plus free toughened-glass table tops for the dining and coffee tables.

Cushions available in a choice of colours

The Smokeless BBQ Collection

Premium Collection with integrated extraction

FLEXIBLE FINANCE OPTIONS AVAILABLE



A more refined way to cook.

A refined, smoke-free way to cook and entertain, built into our luxury wooden gazebos with weatherproof marine grade side panels or weatherproof glazed panels.

An integrated extraction system reduces smoke at source, creating a clean, comfortable space to enjoy cooking and dining together, whatever the season. Built-in grease management keeps cooking cleaner still.

Single and double BBQ units are also available to purchase standalone. All buildings exclude heaters and cabinets. Contact our team for full specifications.

The Smokeless BBQ Collection

Including weatherproof marine grade side & glazed panels

FLEXIBLE FINANCE OPTIONS AVAILABLE

from £370/month*



Windsor with marine side panels

Single grill · 1300 × 1600 mm



Eden with marine side panels

Single grill · 1448 × 868 mm



Eden with weatherproof glazed panels

Single grill · 1448 × 868 mm



Hampton with marine side panels

Double grill · 1600 × 2000 mm



Orangery with marine side panels

Double grill · 2300 × 1000 mm



Orangery with weatherproof glazed panels

Double grill · 2300 × 1000 mm

RRP FROM £37,200

Smokeless BBQ units are also available to purchase standalone.

Delivery and installation included within 100 miles. Base quoted separately after a site survey.

*All prices inc. VAT · 8.9% APR representative · Credit subject to status. Please refer to the price list for representative example.

Luxury Wooden Shelters

EPDM Flat Roof & Cedar Tiled Roof Packages

Tranquility · Horizon · Oceania · Sunrise

LUXURY WOODEN SHELTERS

Escape to your own garden shelter

Inspired by our smaller gazebos and the versatility of the traditional pergola, our shelters extend the use of your garden with a protected space for furniture, a hot tub, BBQ or fire pit. Choose an EPDM flat roof package or a cedar tiled roof package.

FLEXIBILITY
From a small hideaway to a large canopy for family and friends

YEAR-ROUND USE
Permanent garden structures, built to last whatever the weather

INSTALLATION INCLUDED
Our expert team installs your shelter, ready to enjoy from day one

FOUR DESIGNS
Tranquility · Horizon · Oceania · Sunrise



The Shelter Range

Four designs, two roof packages

FLEXIBLE FINANCE OPTIONS AVAILABLE



Tranquility

3.5 × 3.5M



Horizon

6.0 × 3.5M



Oceania

8.0 × 3.5M



Sunrise

8.0 × 3.5M

EPDM Flat Roof Packages

A deluxe pergola-style flat roof for a clean, modern look.

Cedar Tiled Roof Packages

The classic Crown gazebo hipped roof profile, for a traditional, elegant finish.

LUXURY WOODEN SHELTERS

Tranquility

3.5M × 3.5M · 11’6” × 11’6”

Our most compact shelter, a perfect fit for any size of garden and installed by our team in a day or less. The EPDM flat roof gives a modern look, while the cedar tiled roof gives a more traditional, elegant one. All our shelters weather beautifully with minimal maintenance.

PLAN VIEW

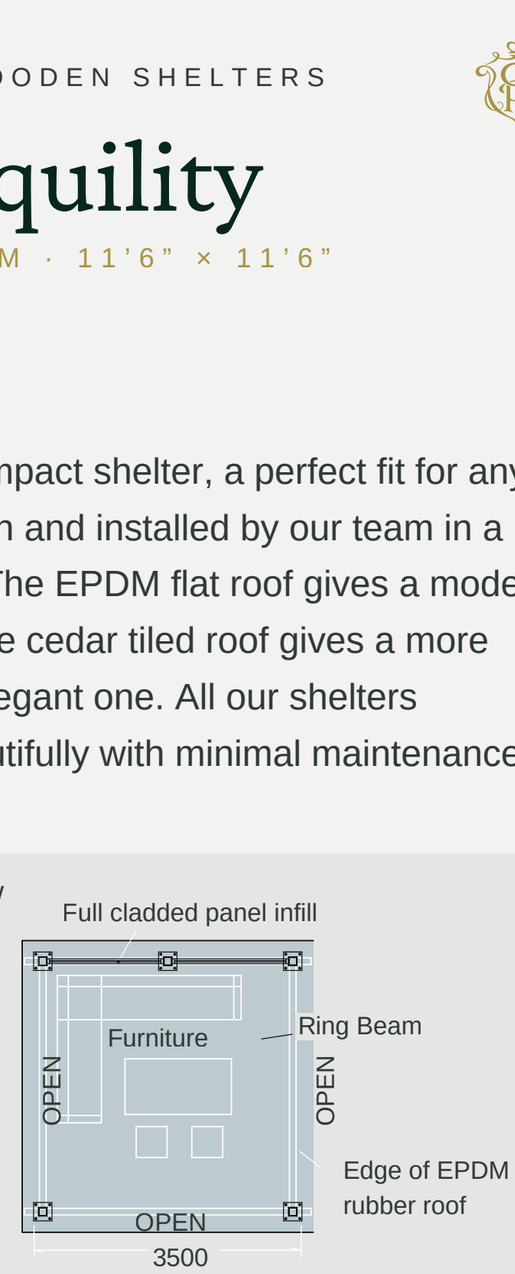

3500 × 3500 mm · furniture not included

RRP FROM £11,250

Visit crownpavilions.com

Installation included (mainland England & Wales)

*All prices inc. VAT · 8.9% APR representative · Credit subject to status. Please refer to the price list for representative example.

Tranquility

Roof packages

FLEXIBLE FINANCE OPTIONS AVAILABLE

from £112/month*



EPDM Flat Roof Package

DELIVERY & INSTALLATION INCLUDED*

- EPDM rubber flat roof
- Redwood timber framed building
- 5 × Timber posts
- 2 × Full cladded back panels
- Underside plywood
- 6 × Bracing supports (ring beam & post)
- Ring beam
- 5 × Metal base plate supports



Cedar Tiled Roof Package

DELIVERY & INSTALLATION INCLUDED*

- Cedar tiled hipped roof
- Redwood timber framed building
- 5 × Timber posts
- 2 × Full cladded back panels
- Underside plywood
- 6 × Bracing supports (ring beam & post)
- Ring beam
- 5 × Metal base plate supports

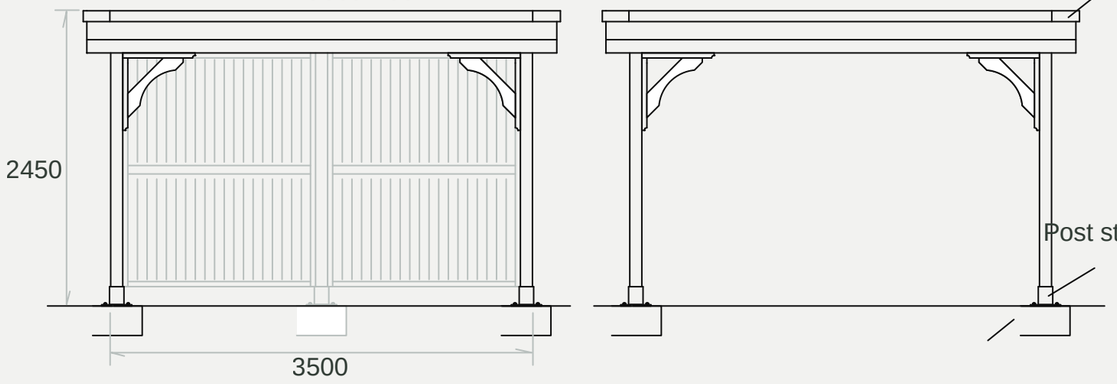

EPDM FLAT ROOF · FRONT & SIDE ELEVATIONS

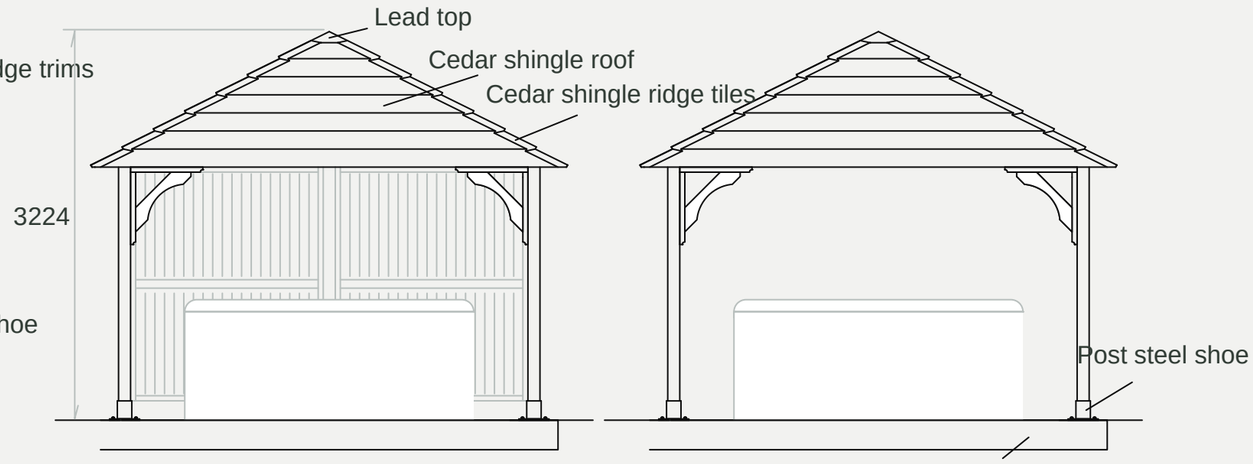

CEDAR TILED ROOF · FRONT & SIDE ELEVATIONS

*A delivery surcharge applies to locations more than 100 miles from our Oxfordshire workshops. Concrete base pads not included.

LUXURY WOODEN SHELTERS

Horizon

6.0M × 3.5M · 19’7” × 11’6”

Measuring 6.0m × 3.5m, the Horizon is the perfect space for garden parties, BBQs and entertaining. The two roof packages create two very distinctive looks: modern EPDM flat, or traditional cedar tiled.

PLAN VIEW

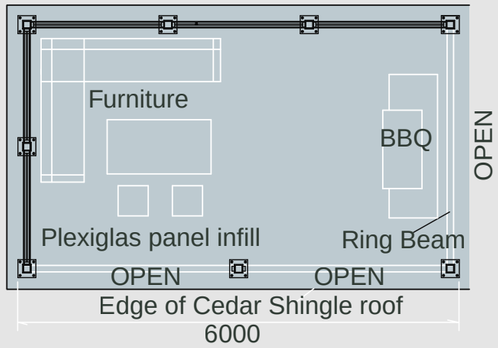

6000 × 3500 mm · furniture not included

RRP FROM £17,250

Visit crownpavilions.com

Installation included (mainland England & Wales)

*All prices inc. VAT · 8.9% APR representative · Credit subject to status. Please refer to the price list for representative example.

Horizon

Roof packages

FLEXIBLE FINANCE OPTIONS AVAILABLE

from £171/month*



EPDM Flat Roof Package

DELIVERY & INSTALLATION INCLUDED*

- EPDM rubber flat roof
- Redwood timber framed building
- 8 × Timber posts
- 3 × Full cladded back panels
- Underside plywood
- 6 × Bracing supports (ring beam & post)
- Ring beam
- 8 × Metal base plate supports



Cedar Tiled Roof Package

DELIVERY & INSTALLATION INCLUDED*

- Cedar tiled hipped roof
- Redwood timber framed building
- 8 × Timber posts
- 3 × Full cladded back panels
- Underside plywood
- 6 × Bracing supports (ring beam & post)
- Ring beam
- 8 × Metal base plate supports

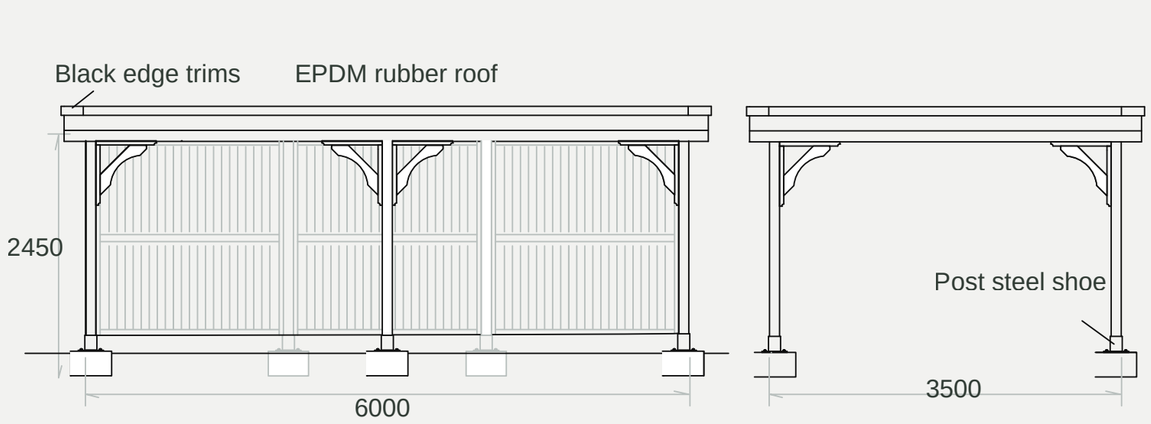

EPDM FLAT ROOF · FRONT & SIDE ELEVATIONS

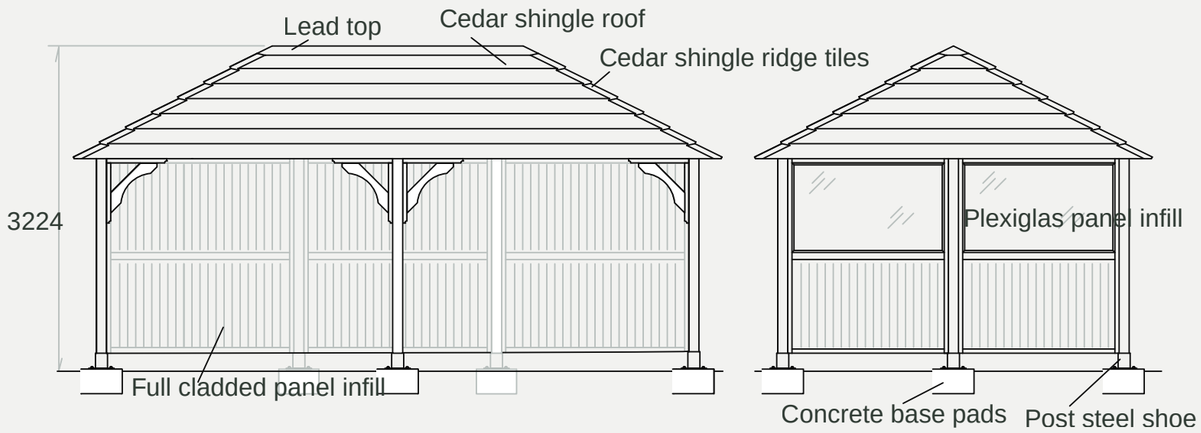

CEDAR TILED ROOF · FRONT & SIDE ELEVATIONS

*A delivery surcharge applies to locations more than 100 miles from our Oxfordshire workshops. Concrete base pads not included.

LUXURY WOODEN SHELTERS

Oceania

8.0M × 3.5M · 26’2” × 11’6”

Impress your guests all year round. Whether you want to house a hot tub or swim spa, relax and grill with friends or host lavish dinner parties, the Oceania is the ultimate garden shelter. Also available with a hipped roof at 8000 × 3500 mm (excluding roof overhang).

PLAN VIEW

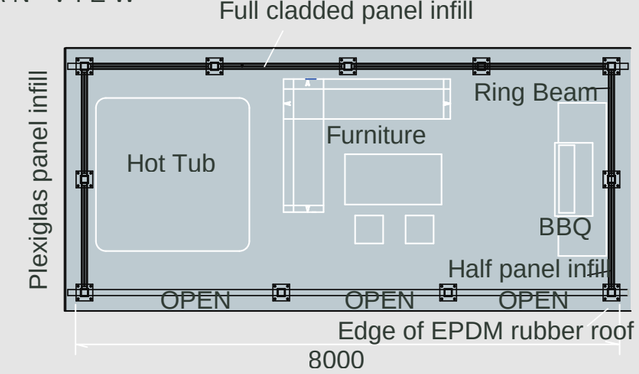

8000 × 3500 mm · furniture, hot tub & BBQ not included

RRP FROM £24,950

Visit crownpavilions.com

Installation included (mainland England & Wales)

*All prices inc. VAT · 8.9% APR representative · Credit subject to status. Please refer to the price list for representative example.

Oceania

Roof packages

FLEXIBLE FINANCE OPTIONS AVAILABLE

from £248/month*



EPDM Flat Roof Package

DELIVERY & INSTALLATION INCLUDED*

- EPDM rubber flat roof
- Redwood timber framed building
- 11 × Timber posts
- 4 × Full cladded back panels
- Underside plywood
- 2 × Half clad & half polycarbonate fixed windows
- 10 × Bracing supports (ring beam & post)
- Ring beam
- 11 × Metal base plate supports



Cedar Tiled Roof Package

DELIVERY & INSTALLATION INCLUDED*

- Cedar tiled hipped roof
- Redwood timber framed building
- 11 × Timber posts
- 4 × Full cladded back panels
- Underside plywood
- 2 × Half clad & half polycarbonate fixed windows
- 10 × Bracing supports (ring beam & post)
- Ring beam
- 11 × Metal base plate supports

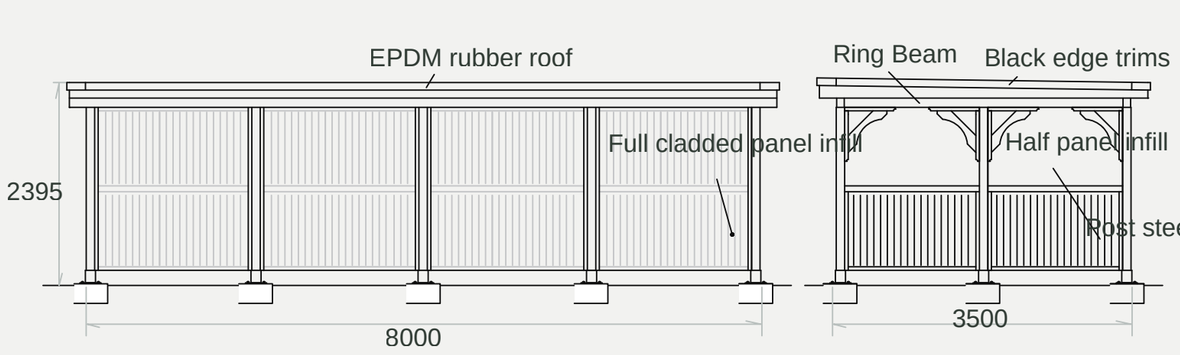

EPDM FLAT ROOF · FRONT & SIDE ELEVATIONS

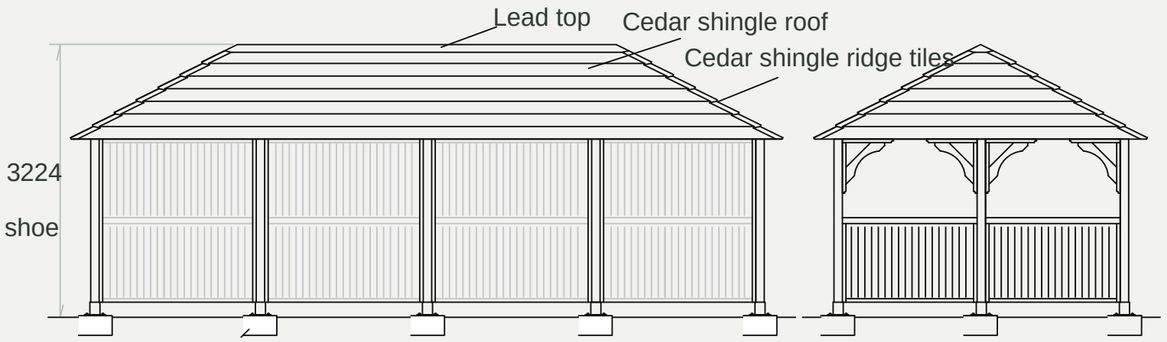

CEDAR TILED ROOF · FRONT & SIDE ELEVATIONS

*A delivery surcharge applies to locations more than 100 miles from our Oxfordshire workshops. Concrete base pads not included.

LUXURY WOODEN SHELTERS

Sunrise

8.0M × 3.5M · 26’2” × 11’6”

Functional and stylish, with two beautiful roof packages to choose from: EPDM flat roof or cedar tiled roof. Made using only the finest materials and built to last, the Sunrise also makes a superb timber carport.

PLAN VIEW

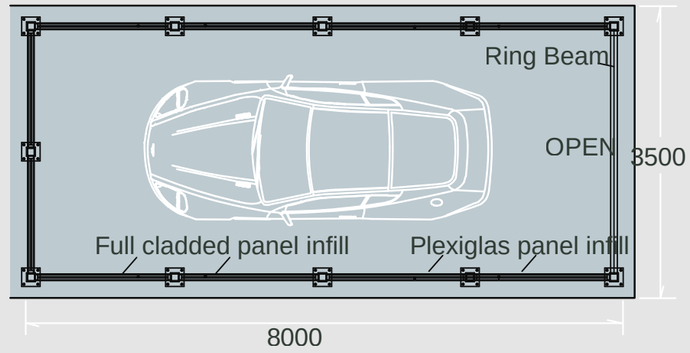

8000 × 3500 mm

RRP FROM £23,500

Visit crownpavilions.com

Installation included (mainland England & Wales)

*All prices inc. VAT · 8.9% APR representative · Credit subject to status. Please refer to the price list for representative example.

Sunrise

Roof packages

FLEXIBLE FINANCE OPTIONS AVAILABLE

from £234/month*



EPDM Flat Roof Package

DELIVERY & INSTALLATION INCLUDED*

- EPDM rubber flat roof
- Redwood timber framed building
- 11 × Timber posts
- 6 × Full cladded panels
- Underside plywood
- 4 × Half clad & half polycarbonate fixed windows
- 2 × Bracing supports (ring beam & post)
- 11 × Metal base plate supports



Cedar Tiled Roof Package

DELIVERY & INSTALLATION INCLUDED*

- Cedar tiled hipped roof
- Redwood timber framed building
- 11 × Timber posts
- 6 × Full cladded panels
- Underside plywood
- 4 × Half clad & half polycarbonate fixed windows
- 2 × Bracing supports (ring beam & post)
- 11 × Metal base plate supports

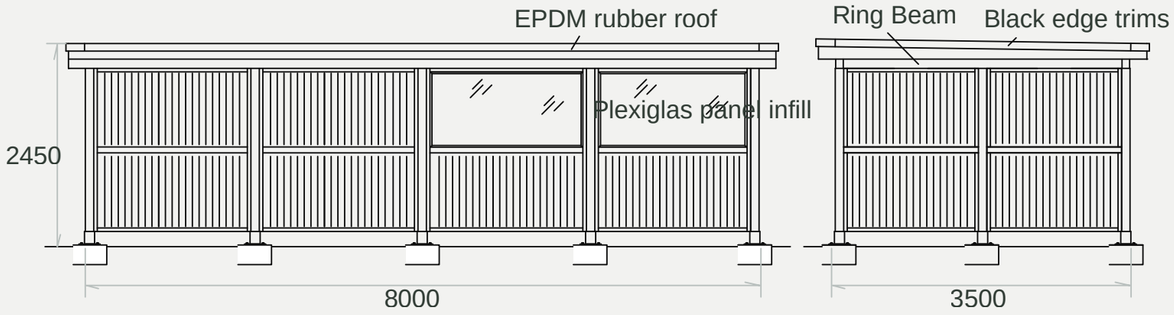

EPDM FLAT ROOF · FRONT & SIDE ELEVATIONS

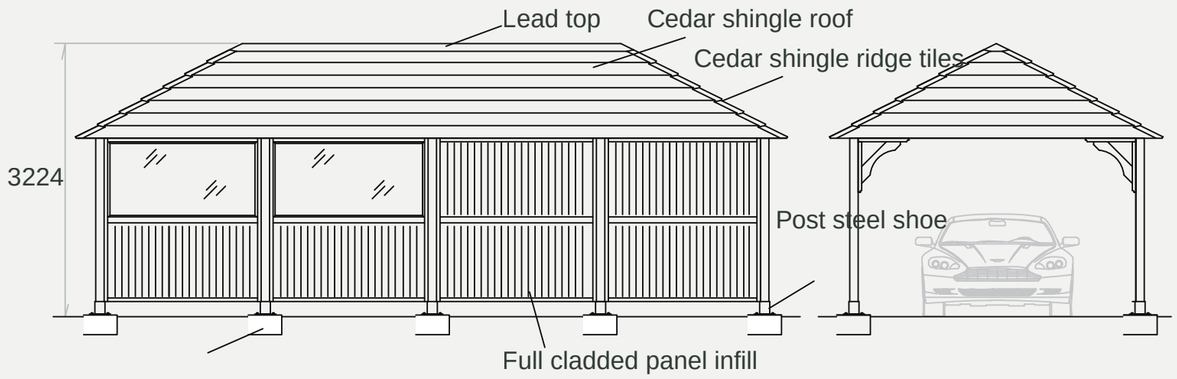

CEDAR TILED ROOF · FRONT & SIDE ELEVATIONS

*A delivery surcharge applies to locations more than 100 miles from our Oxfordshire workshops. Concrete base pads not included.

Crown Bespoke Service

The possibilities are endless

FLEXIBLE FINANCE OPTIONS AVAILABLE



The world's finest bespoke garden buildings







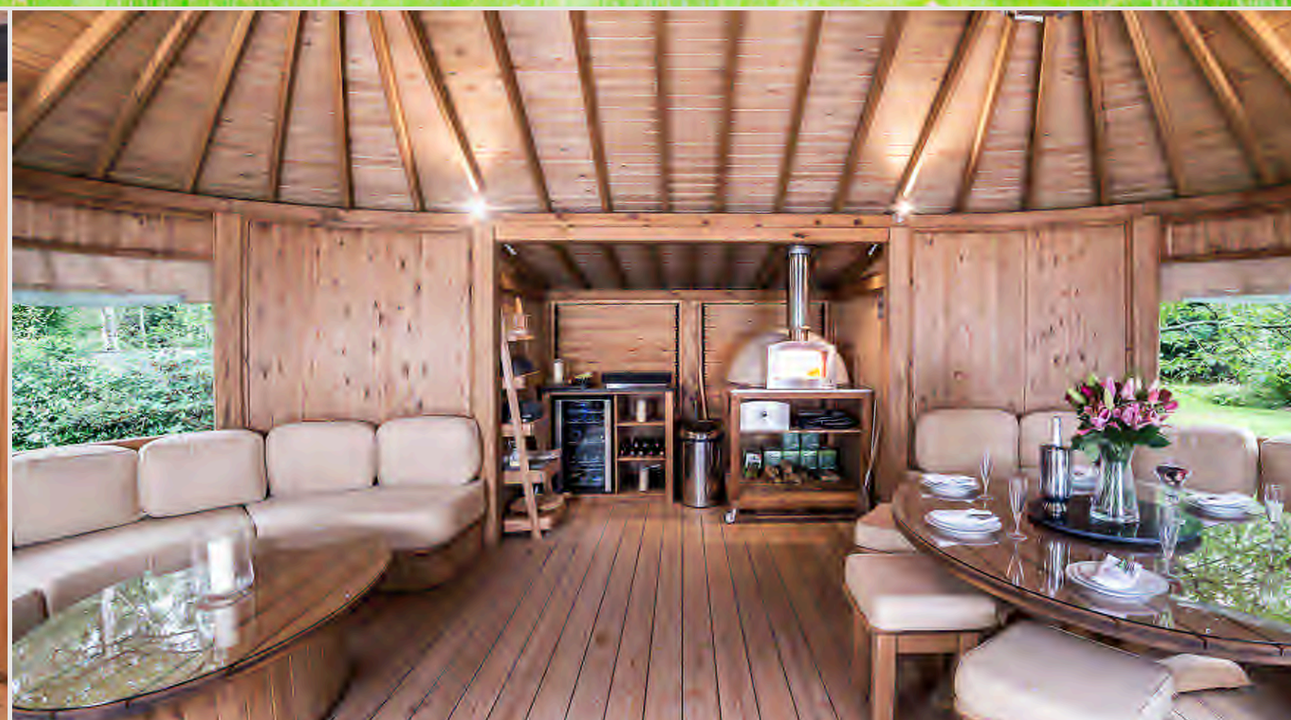

Crown EcoGrid Foundations

Why choose an EcoGrid base for your gazebo?

FLEXIBLE FINANCE OPTIONS AVAILABLE

The benefits of an EcoGrid base

- Lower cost alternative to a concrete base.
- EcoGrid creates much less mess in the garden than installing a concrete base - the garden returns to its natural attractive state much more quickly.
- No need to find a local contractor to lay the base - the Crown Pavilions in-house team will lay it instead.
- Your gazebo can be installed more quickly, as there is no base contractor's lead time nor concrete slab curing time to factor in.
- By using a 100% recycled and reusable plastic grid system for the base, you are helping the environment.
- Better for the gazebo - the floor bearers are preserved for longer by siting them on EcoGrid's honeycomb structure, on which rainwater cannot puddle.
- Encourages the use of a French drain around the perimeter of the building, reducing unsightly rainwater splashback on the lower timbers of the gazebo.



EcoGrid gravel colour options



C o t s w o l d



D o v e G r e y



F l a m i n g o



Golden Flint



Ice Blue



Polar White

Gazebo Floor Plans

Footprints and dimensions in mm - Premium Collection

FLEXIBLE FINANCE OPTIONS AVAILABLE

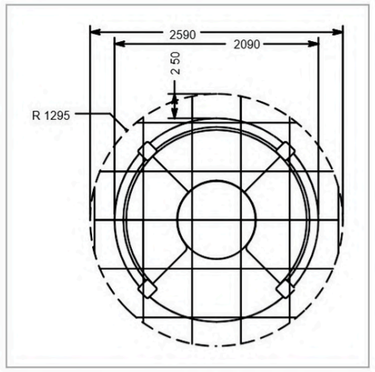

Rose

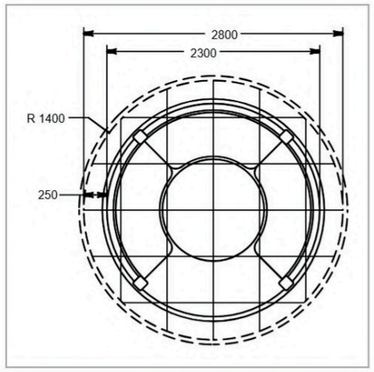

Chelsea

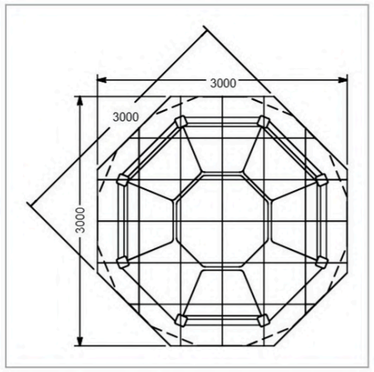

Tudor

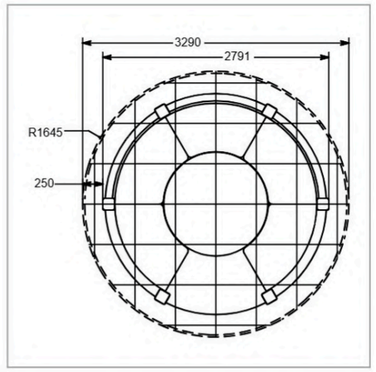

Elizabeth

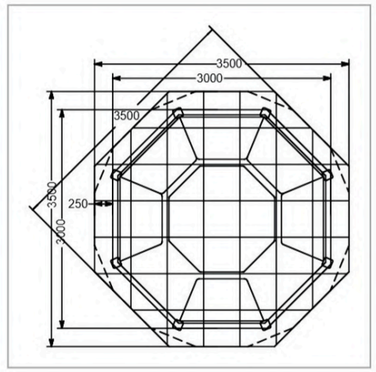

Guinevere

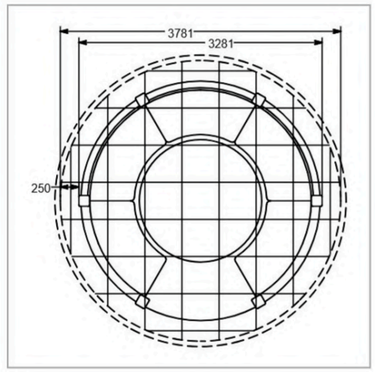

Edward

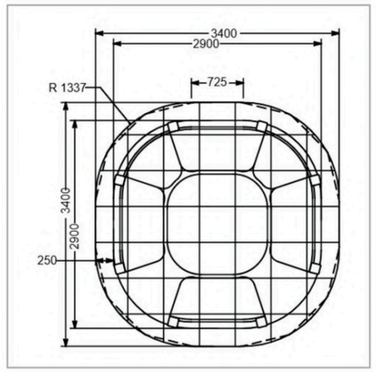

Wolsey

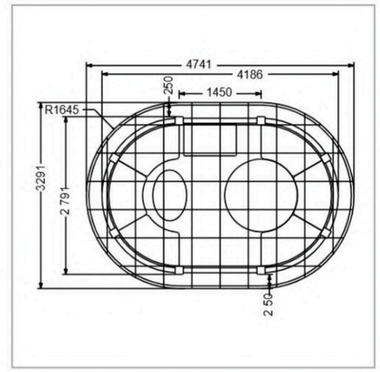

Ascot

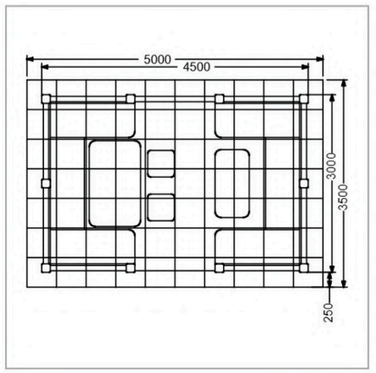

Eden

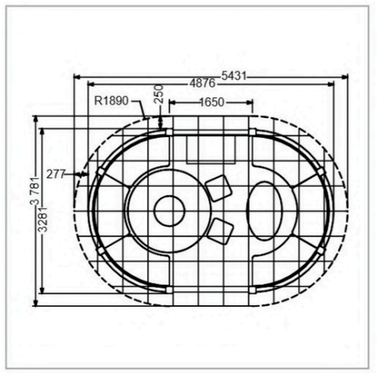

Windsor

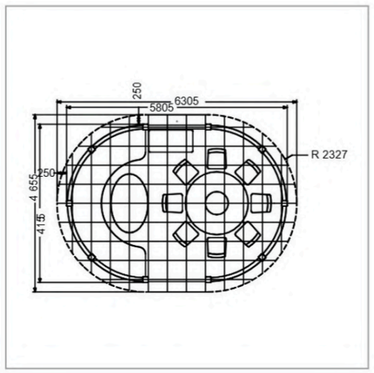

Hampton

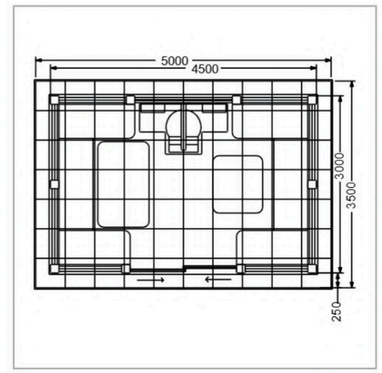

Eden Glazed

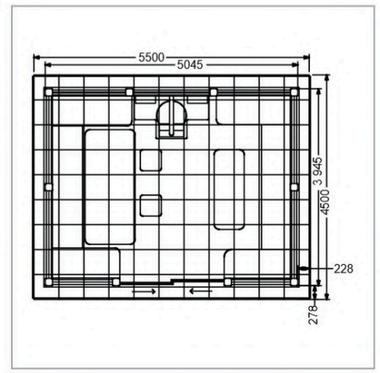

Orangery Glazed

Tanalised Deck & Ground Screws

FLEXIBLE FINANCE OPTIONS AVAILABLE

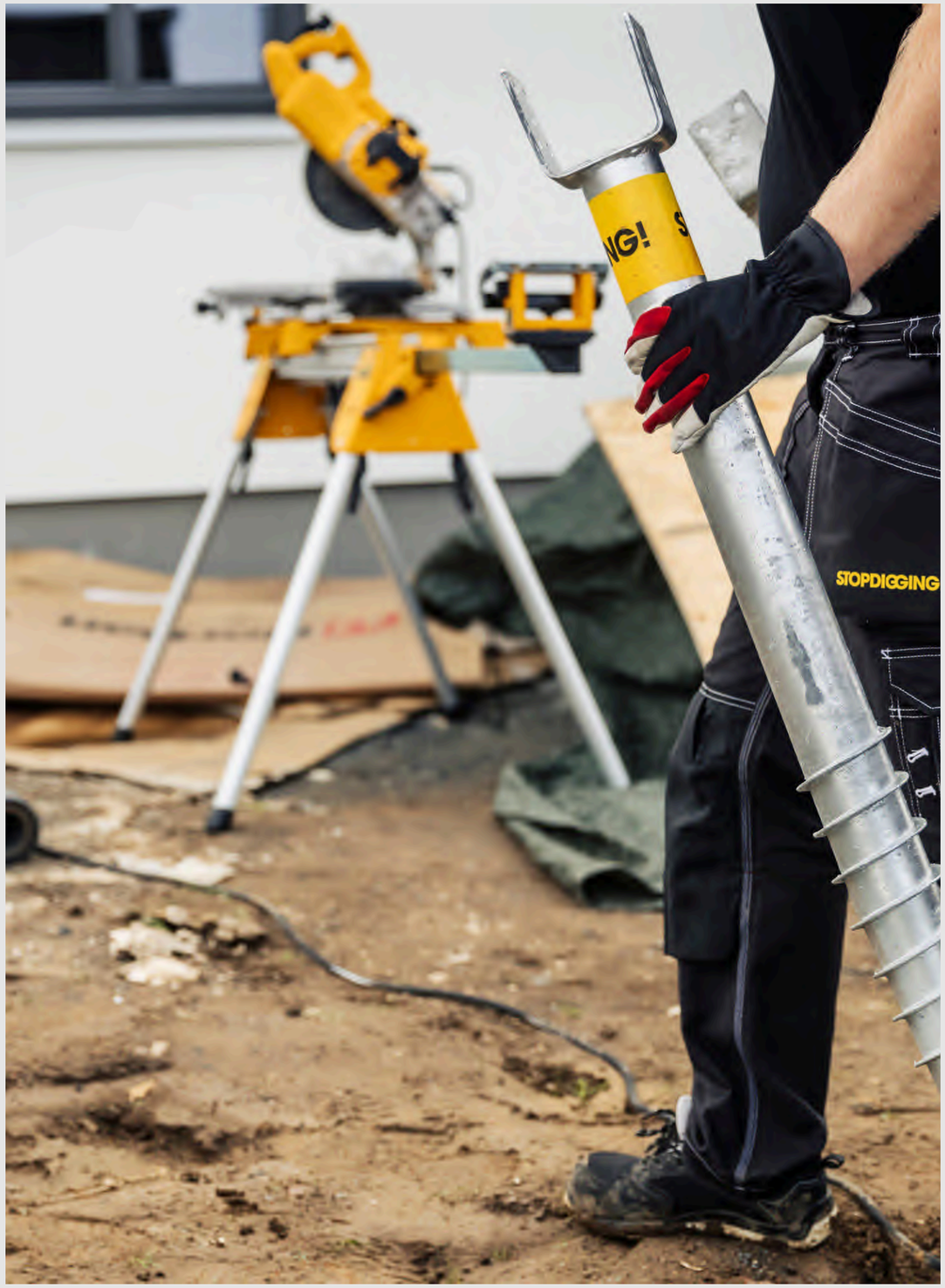

Smarter, Greener Foundations for our Luxury Gazebos, Relaxation & Entertaining

Crown Pavilions is proud to introduce its most luxurious solution and offering to complement your gazebo purchase.

We now have a foundation solution that will complement your garden, landscaping and any future plans you may have. A robust, beautiful, natural tanalised redwood timber decked platform, carefully designed to accommodate your chosen pavilion.

Our tanalised redwood decked platforms are meticulously fitted onto our own ground screw foundation (subject to passing our required ground screw test to verify the suitability of the ground) and tanalised joists. As the decking and ground screws are raised off the ground, this will also ensure the longevity of your pavilion. We finish off all timber decked platforms with a neatly constructed timber skirt surround.

We are also excited to extend our offering should you decide to increase the size of your decked platform to be used as an additional area in your garden for relaxing, outdoor furniture, a BBQ, sun loungers or an additional entertaining area. The possibilities are endless and this is a very cost-effective way to create a beautifully landscaped area which looks clean, natural, low maintenance, and multi-purpose. You may also choose to soften the space with plants, mood lighting, and water features to create a truly stunning setting with your Crown Pavilion as the focal point.

Tanalised Deck Floor Plans

Standard decked platform sizes in mm - bespoke sizes available

FLEXIBLE FINANCE OPTIONS AVAILABLE

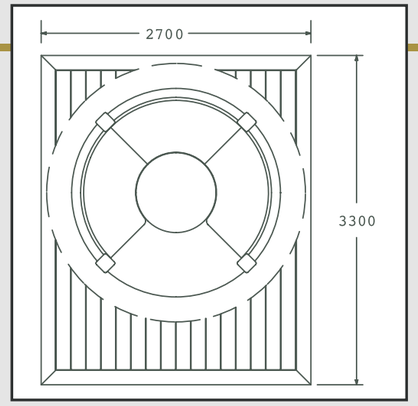

Rose

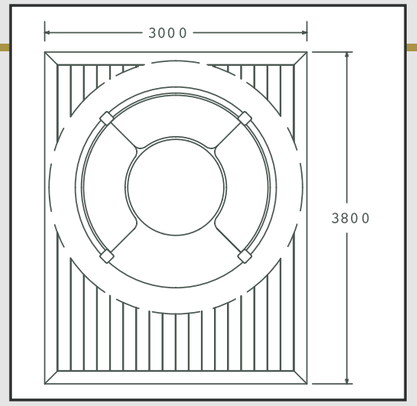

Chelsea

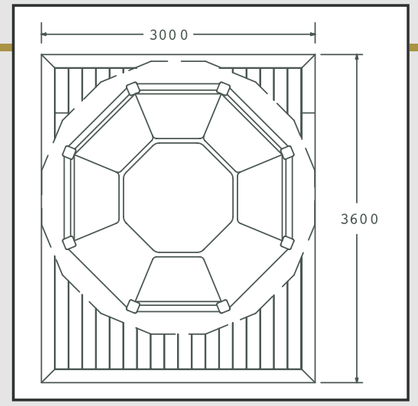

Tudor

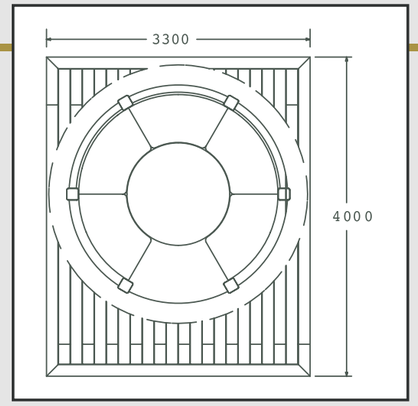

Elizabeth

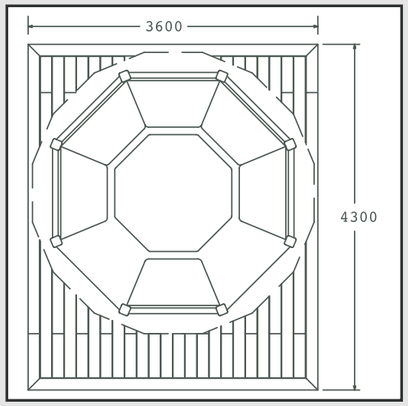

Guinevere

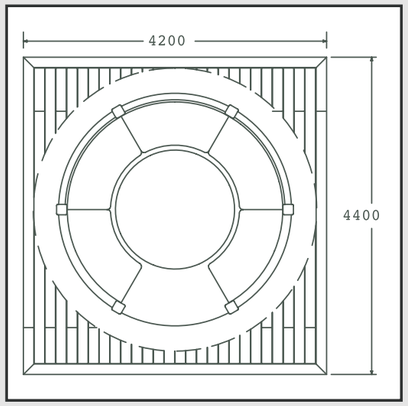

Edward

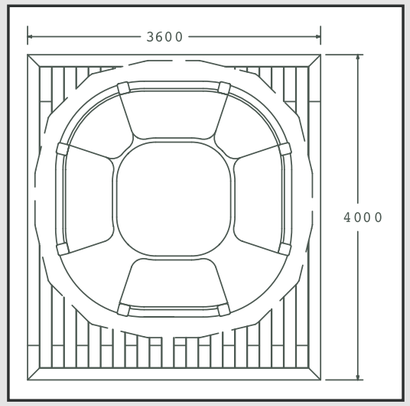

Wolsey

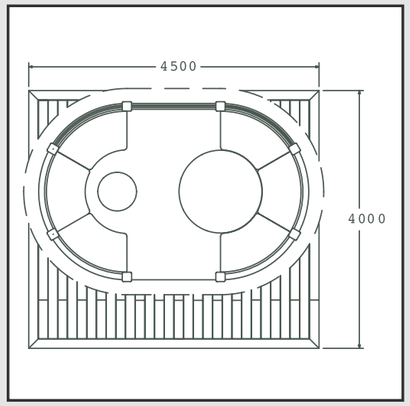

Ascot

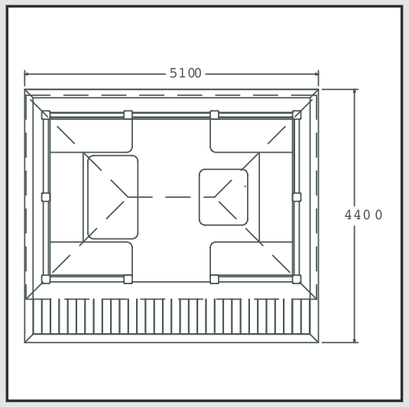

Eden

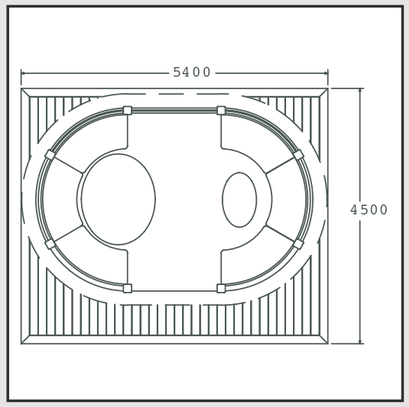

Windsor

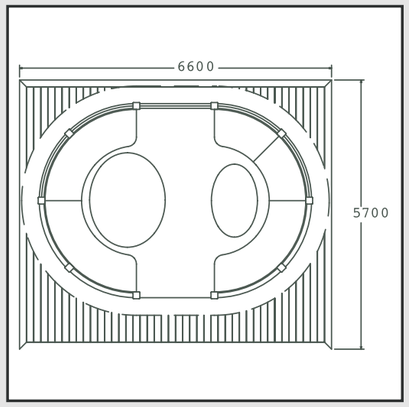

Hampton

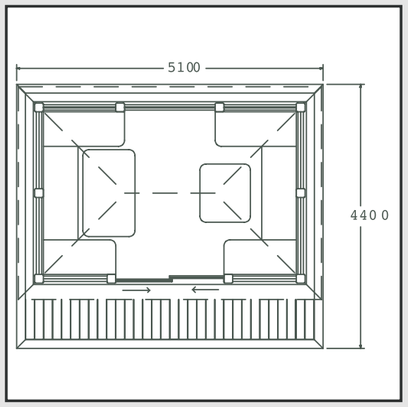

Eden Glazed

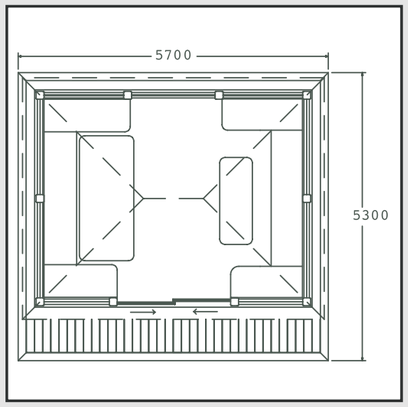

Orangery Glazed

Composite Deck & Ground Screws

Low-maintenance decking in a choice of colours

FLEXIBLE FINANCE OPTIONS AVAILABLE



Smarter, Greener Foundations for our Luxury Gazebos, Relaxation & Entertaining

Crown Pavilions is proud to introduce its most luxurious solution and offering to complement your gazebo purchase.

We now have a foundation solution that will complement your garden, landscaping and any future plans you may have. A robust, beautiful, virtually maintenance-free composite decked platform in a choice of colours, carefully designed to accommodate your chosen pavilion.

Our composite decked platforms are meticulously fitted onto our own ground screw foundation (subject to passing our required ground screw test to verify the suitability of the ground) and tanalised joists. As the decking and ground screws are off the ground, this will also ensure the longevity of your pavilion. We finish off all composite decked platforms with a beautiful composite skirt surround.

We are also excited to extend our offering should you decide to increase the size of your decked platform to be used as an additional area in your garden for relaxing, outdoor furniture, a BBQ, sun loungers or an additional entertaining area. The possibilities are endless and this is a very cost-effective way to create a beautifully landscaped area which looks clean, low maintenance and multi-purpose, and that you may decide to landscape and soften with plants, mood lighting and water features to create a truly stunning space with your Crown Pavilion as the focal point.

Composite Deck Floor Plans

Standard decked platform sizes in mm - bespoke sizes available

FLEXIBLE FINANCE OPTIONS AVAILABLE

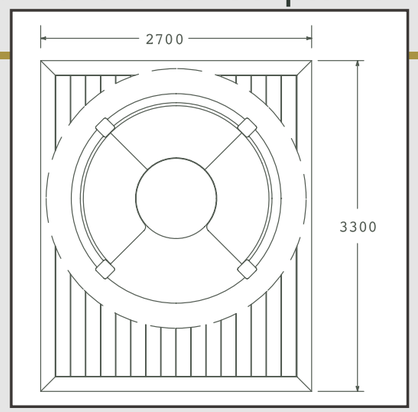

Rose

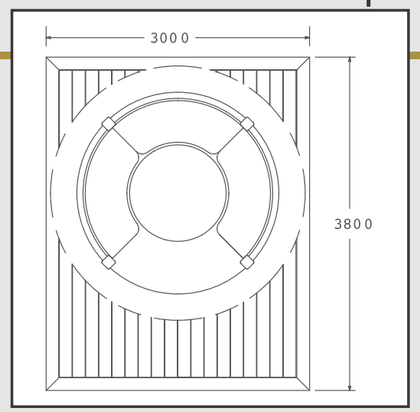

Chelsea

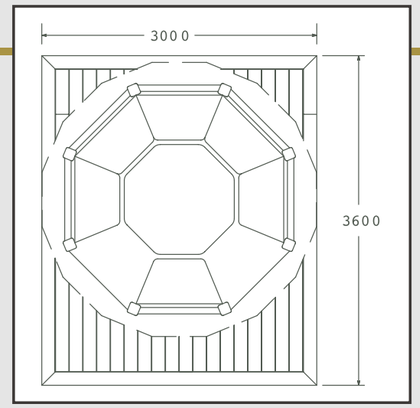

Tudor

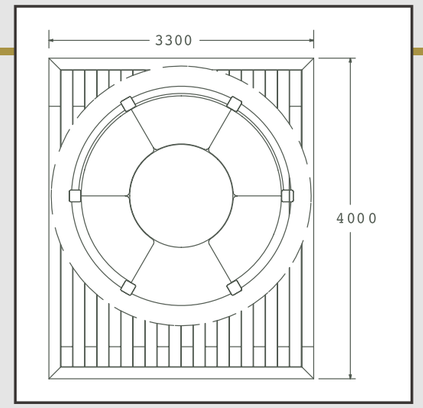

Elizabeth

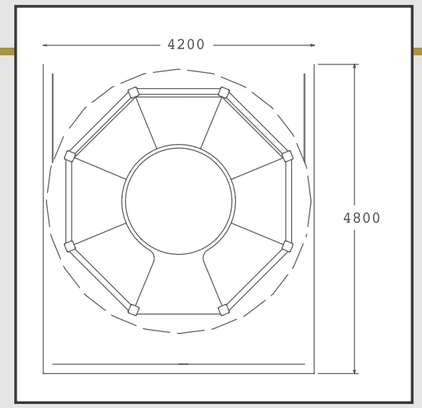

Wentworth

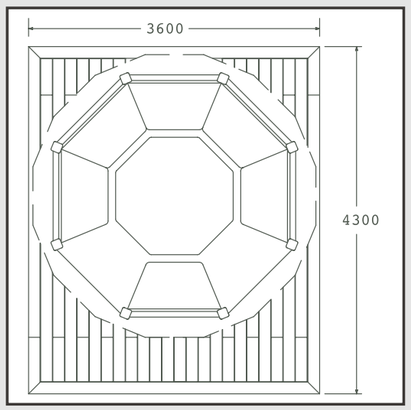

Guinevere

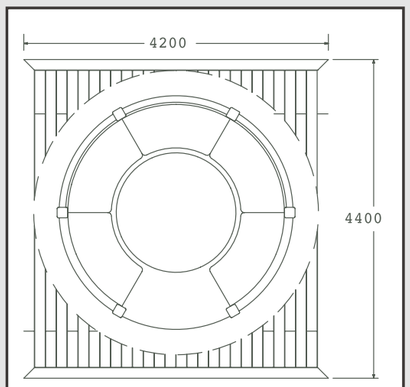

Edward

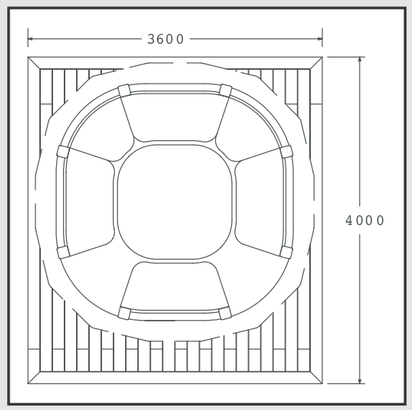

Wolsey

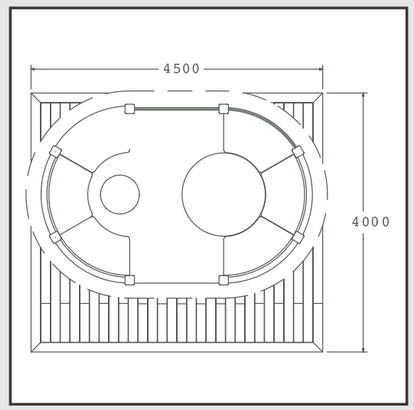

Ascot

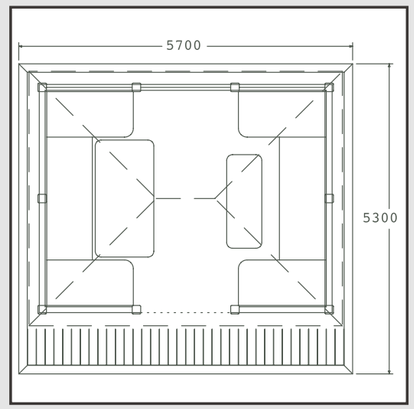

Orangery

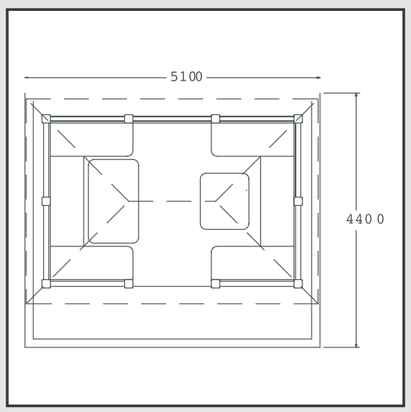

Eden

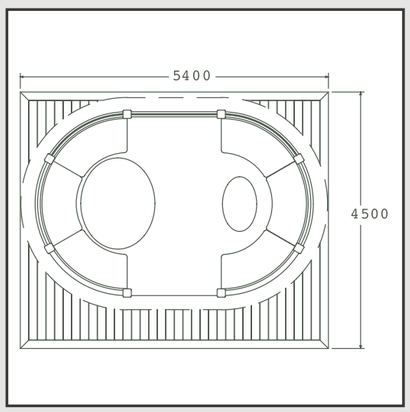

Windsor

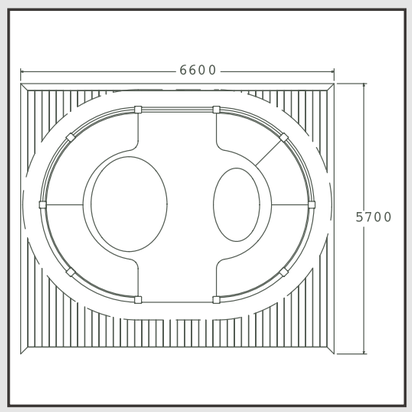

Hampton

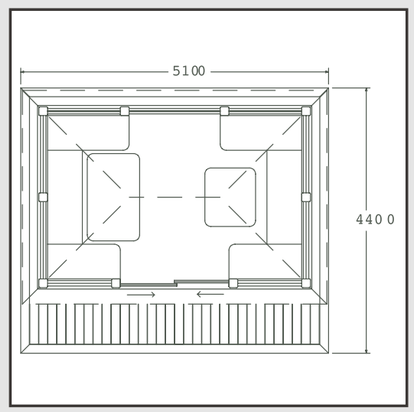

Eden Glazed

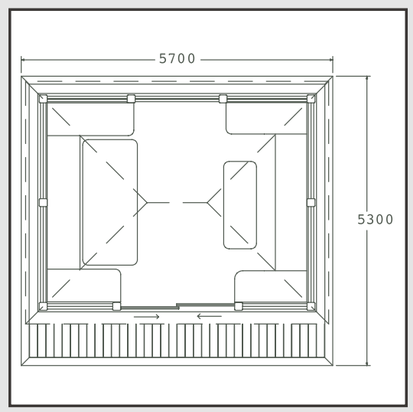

Orangery Glazed

A Greener, Faster Alternative to Concrete

Ground screw foundations

FLEXIBLE FINANCE OPTIONS AVAILABLE

Ground screws are revolutionising how we build. Unlike concrete, they can be installed in minutes, are weather-resistant, and create zero mess. Ideal for garden rooms, gazebos and other outdoor structures, they offer strength without the environmental compromise.

- 125+ year lifespan
- Installed in all weather
- Zero curing time
- Minimal soil disturbance
- Reusable and recyclable
- Lower CO_2 footprint than concrete



Composite decking finishes

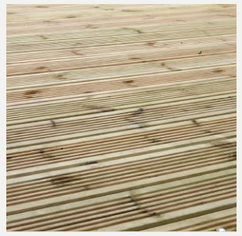

Grooved Redwood



Burnt Oak / Rosewood (reversible)

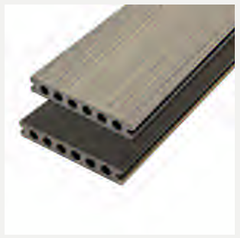

Pewter / Onyx (reversible)



Platinum / Sandstone (reversible)



Professional ground testing by StopDigging



Eco-friendly technology, engineered to last

Bespoke Decking Service

Customise your decked platform to suit your garden

FLEXIBLE FINANCE OPTIONS AVAILABLE

Customise your decking

Customise your decking (excludes curved shapes). This includes ground screws, decking, skirting and trims. Ground must be level and free from tree roots, debris or concrete. Please ensure ground is cleared completely and back to soft ground prior to our arrival.

£544 inc. VAT per m²

What's included

*Price includes ground screw installation (subject to approval of ground screw test), tanalised joists and decking (supplied and fitted) with skirting and trims to finish ready for the delivery and installation of your pavilion. Should you want a larger deck than included within the prices stated, please speak to one of our team and we can price accordingly based on the desired m² increase. All prices inc. VAT.
Site survey and ground screw test: £460 inc. VAT.



Our Showrooms

See our craftsmanship first-hand at six garden centres

FLEXIBLE FINANCE OPTIONS AVAILABLE



This brochure showcases our beautiful gazebo and shelter collections, but there is never any substitute for seeing our garden buildings in person: to feel the comfort of the cushions, take in the natural scent of the timber, run your hand along the smooth contours of the carpentry and appreciate the quality of our craftsmanship first-hand. A selection of the buildings in this brochure can be viewed in our showrooms, along with our other most popular garden rooms and accessories. Experienced staff will be on hand to answer any questions and talk about our designs in more detail.

ESSEX

Alton Garden Centre

Arterial Road, Wickford,
Essex SS12 9JG

HERTFORDSHIRE

Van Hage Garden Centre

Great Amwell, Ware,
Hertfordshire SG12 9RP

LONDON

Chessington Garden Centre

Leatherhead Road, Chessington,
Surrey KT9 2NG

BUCKINGHAMSHIRE

Frosts Garden Centre

Newport Road, Woburn Sands,
Buckinghamshire MK17 8UE

SURREY

Longacres Garden Centre

London Road, Bagshot,
Surrey GU19 5JB

CHESHIRE

Bridgemere Garden Centre

Bridgemere, Nantwich,
Cheshire CW5 7QB

To book a show site visit call 01491 612 820
sales@crownpavilions.com
crownpavilions.com


SWIMSUITS

The marque of excellence

HEAD OFFICE

6b Lys Mill, Watlington, Oxfordshire OX49 5EQ

Tel: 01491 612 820

sales@crownpavilions.com

CROWNPAVILIONS.COM

Trustpilot

Issued 11 November 2026